[High Precision] XY-Axis, Rotary, Feed Screw / [High Precision] Dovetail Slide, Feed Screw

Features: Compact Sized and Integrated Type Stages rotatable and slidable based on XY-Axis.

XY-Axis + Rotary

Scale is provided with the actual product.
For specifications, see Specification Diagram.

RoHS

XYRSL60

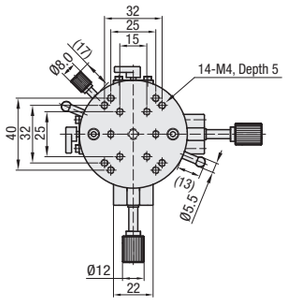

XYRSL90

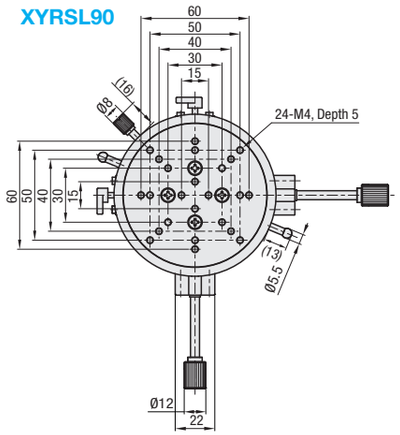

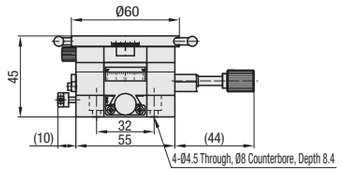

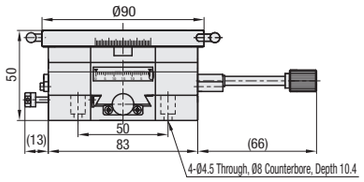

M Material: Aluminum Alloy
S Surface Treatment: Black Anodize

Part Number Type	No.	Stage Surface (mm)	Travel Distance (mm)	Travel per Rotation (mm)	Load Capacity (N)	Straightness (μm)	Weight (kg)	Unit Price
XYRSL	60	Ø60	X: ±21	4.2	34.3	30	0.39	
			360° Rotation					
	90	Ø90	X: ±35				0.88	
			360° Rotation					

Ordering Example: Part Number XYRSL60

Features: XZ-Axis dovetail slide stages with 15mm thickness. Shipped orthogonally aligned to ease customer's assembly steps.

XZ-Axis Feed Screw (Lead 0.5mm)

X-Axis P.1897
Z-Axis P.1962

RoHS

XZEG

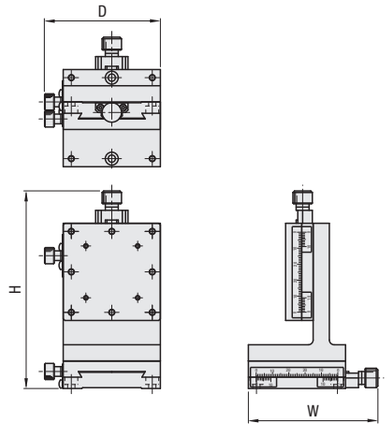

M Material: (Main Body) Low Cadmium Brass
(Feed Knob) Aluminum
S Surface Treatment: Black Fluororesin Treatment

Standard Stages with Similar Specifications: Combination of XFES (**P.1896**) and ZFES (**P.1961**)

Part Number Type	No.	Stage Configuration Bottom	Top	Stage Surface (mm)	External Dimension (mm) W	D	H	Travel Distance (mm) X	Z	Load Capacity (N)	Weight (kg)	Accessory (4 pcs.) Type M-L	Unit Price
XZEG	25	XEG25	ZEG25	25x25	45	31.7	72.5	±5	±5	9.8	0.17	SCB2-8	
	40	XEG40	ZEG40	40x40	60	46.7	95.0	±7	±7		0.46	SCB3-6	
	60	XEG60	ZEG60	60x60	80.5	71.8	122.5	±9	±9	19.6	1.35	SCB4-6	

For dimension details, see the CAD data and the catalog page for each stage. (XEG: **P.1897**, ZEG: **P.1962**)

Ordering Example: Part Number XZEG25

[High Precision] Dovetail Slide, Rack & Pinion / X: Feed Screw, Z: Rack & Pinion

Features: Rapid feeding XZ-Axis stages with 18mm travel per knob rotation. Shipped orthogonally aligned to ease customer's assembly steps.

XZ-Axis, Rack & Pinion

X-Axis P.1911
Z-Axis P.1957

RoHS

XZFG

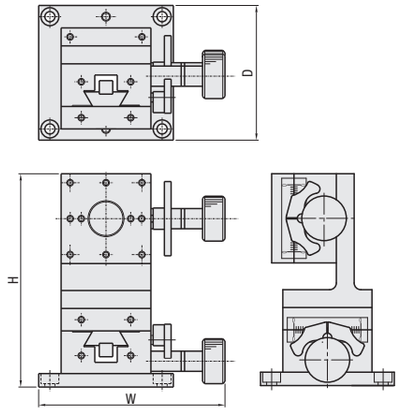

Part Number	M Material	S Surface Treatment
XZFG25	Low Cadmium Brass	Black Fluororesin Treatment
XZFG40	Aluminum Alloy	Black Anodize
XZFG60		

Part Number Type	No.	Stage Configuration Bottom	Top	Stage Surface (mm)	External Dimension (mm) W	D	H	Travel Distance (mm) X	Z	Load Capacity (N)	Weight (kg)	Accessory (4 pcs.) Type M-L	Unit Price
XZFG	25	XFG25	ZFG25	25x25	40	38	55.5	±5	±5	6.9	0.20	SCB2-12	
	40	XFG40	ZFG40	40x40	83	60	95.0	±10	±10	14.7	0.45	SCB4-6	
	60	XFG60	ZFG60	60x60	110	80	105.5	±20	+20	19.6	1.25	SCB4-6	

For dimension details, see the CAD data and the catalog page for each stage. (XFG: **P.1911**, ZFG: **P.1957**)

For orders larger than indicated quantity, please request a quotation.

Ordering Example: Part Number XZFG25

Features: Travel per knob rotation for X-Axis is 0.5mm, and for Z-Axis is 14/20mm. XZ stage with a fine feed X-Axis and a rapid feed vertical Z-axis.

Moving Horizontal Surface XZ Stage

RoHS

XZLNG25

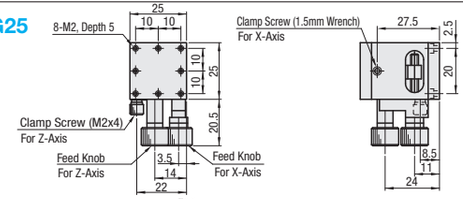

XZLNG40

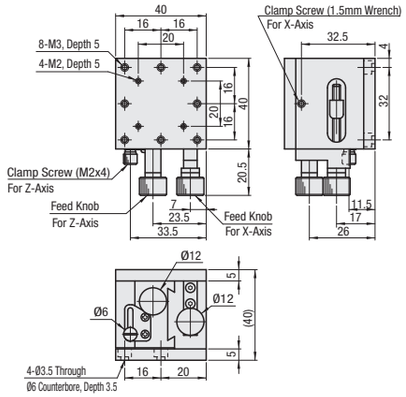

XZLNG60

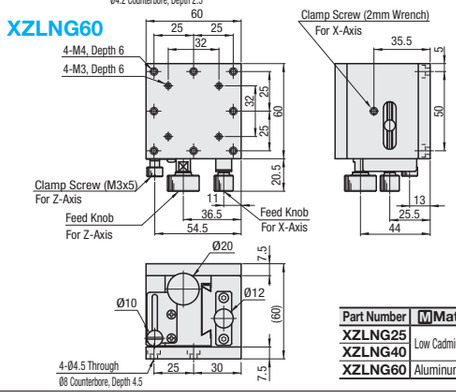

Part Number	M Material	S Surface Treatment
XZLNG25	Low Cadmium Brass	Black Fluororesin Treatment
XZLNG40		
XZLNG60	Aluminum Alloy	Black Anodize

Part Number Type	No.	Stage Surface (mm)	Travel Distance (mm)	Travel per Rotation (mm)	Load Capacity (N)	Travel Accuracy Straightness	Weight (kg)	Accessory (4 pcs.) Type M-L	Unit Price
XZLNG	25	25x25	X: ±5 Z: +10	X: 0.5 Z≈14	9.8	30μm	0.17	SCB2-5	
	40	40x40	X: ±7 Z: +10				0.51	SCB3-6	
	60	60x60	X: ±10 Z: +26	X: 0.5 Z≈20			0.62	SCB4-8	

No graduated scale on XZLNG.

For orders larger than indicated quantity, please request a quotation.

Ordering Example: Part Number XZLNG60