※ THIS DRAWING CAN NOT BE COPIED OR DISCLOSED IN WHOLE OR IN PART WITHOUT, THE EXPRESS WRITTEN CONSENT OF PYRAMID PRECISION ENGINEERING (INDIA) PVT LTD.

RevNo	Revision note	Date	Signature	Checked

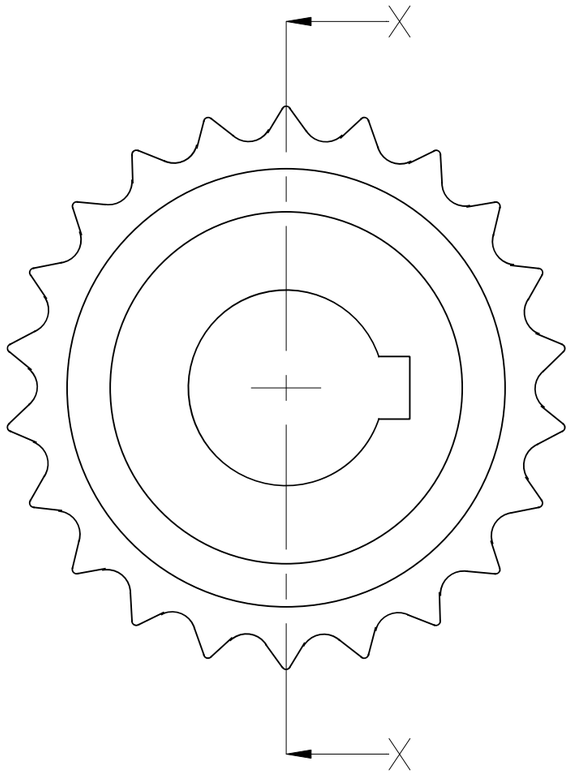

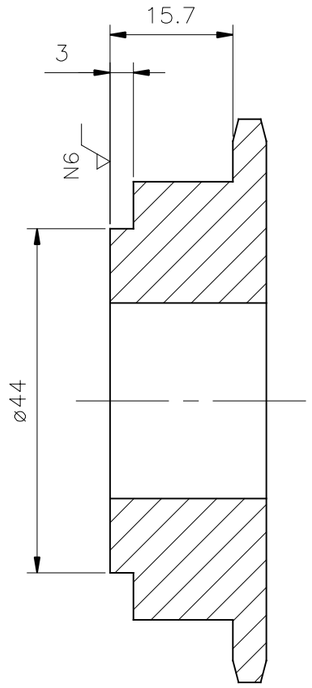

SECTION X–X

REFER: SSTM–EREN–01–2015–SD–12/A

SPROCKET
35B SERIES
PART NO: BSP35B22–N–25
MAKE : MISUMI
MATERIAL: S45C INDUCTION HARDENED
TEETH TIP

MACHINING:

1. TURNING – BOSS STEP DIAMETER ø44x3
2. SURFACE GRINDING

NOTE:

GENERAL SURFACE ROUGHNESS N8
NO SHARP EDGES.
ALL CORNERS ARE 0.5x45° CHAMFER

DEVIATIONS FOR OPEN DIMNS. AS PER IS:2012 (PART 1) MEDIUM CLASS									
DIMN.	OVER	-	6	30	120	400	1000	2000	>4000
	UPTO & INCL.	6	30	120	400	1000	2000	4000	
TOLERANCE		±0.1	±0.2	±0.3	±0.5	±0.8	±1.2	±2	±3

SURFACE FINISH SYMBOLS												
ROUGHNESS GRADE No.	N1	N2	N3	N4	N5	N6	N7	N8	N9	N10	N11	N12
ROUGHNESS VALUE µm	0.025	0.05	0.1	0.2	0.4	0.8	1.6	3.2	6.3	12.5	25	50

PYRAMID PRECISION ENGINEERING INDIA PVT LTD
3/79, PKS GARDENS,
EVR PERIYAR ROAD
PALAVAKAM CHENNAI-600 041
Website : www.ppeindia.com
E-Mail : info@ppeindia.com
PH:-91 4424922257

MATERIAL: -	QUANTITY: 1No

ALL DIMENSIONS ARE IN MM

40kgm² SMALL SCALE TESTING MACHINE

STATIC DRIVE -
DRIVE 22T SPROCKET - MACHINING

DRAWN BY:	DESIGN BY:	CHECKED BY:	SIZE: A4	SCALE: NTS	SHEET: 2 OF 2
ANITH	P.M.V	THANIGAI			
PLACE	DATE	SIGNATURE	JOB No.	DRAWING No.	REV.
CHENNAI	20-01-2016			SSTM-EREN-01-2015-SD-12/B	