Metal bodied limit switch
Series ENM2

Description **ENM2-SU1Z HWT RO20**	Article number **6087371035**

Operating symbol

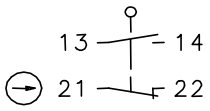

Operating diagram

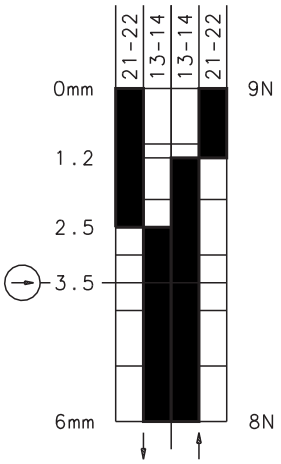

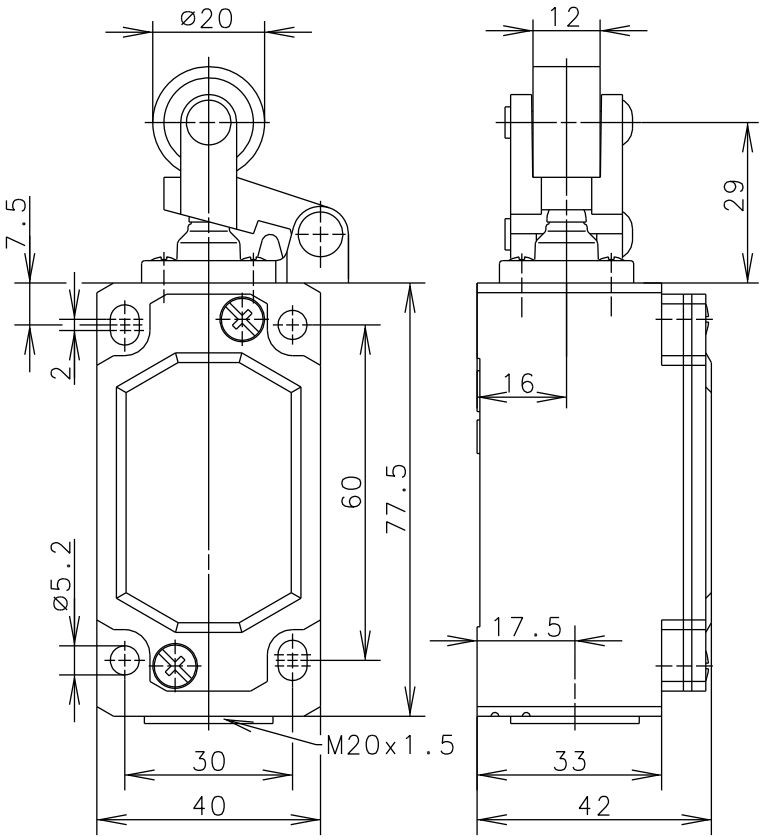

On Off

Tolerance:
Operating Point ± 0,25 mm;
Operating force ± 10 %

Electrical Data		
Rated insulation voltage	U_i	400 V AC
Conv. thermal current	I_{the}	10 A
Rated operational voltage	U_e	240 V
Utilization category		AC-15, U_e/I_e 240 V / 3 A
Direct opening action	⊖	acc. to IEC/EN 60947-5-1, annex K
Short-circuit protective device		Fuse 2 A gG
Protection class		I

Mechanical data	
Enclosure	Die-cast aluminium
Cover	Sheet aluminium
Actuator	Lever (Zn-die cast), roller (st)
Ambient air temperature	-30 °C ... +80 °C
Contact type	1 N.C., 1 N.O. (Zb)
Mechanical life	10 x 10^6 operating cycles
Switching frequency	≤ 100 / min.
Assembly	4 x M5
Connection	4 screw connections (M3,5)
Conductor cross-sections	Solid: 0,5 ... 1,5 mm^2 or Litz wire with ferrules: 0,5 ... 1,5 mm^2
Cable entrance	1 x M20 x 1,5
Weight	≈ 0,23 kg
Installation position	operator definable
Protection type	IP65 acc. to EN 60529

Actuation
The actuating device is preferably started from 1 side. By loosening the 4 screws the actuation assembly can be rotated in 90 degree increments such that 4 actuation directions are possible. The actuation assembly is to be again fastened to the housing using the 4 screws.

ID for safety engineering	
B10d	20 x 10^6 cycles

Standards	
	VDE 0660 T100, DIN EN 60947-1, IEC 60947-1
	VDE 0660 T200, DIN EN 60947-5-1, IEC 60947-5-1
	DIN EN ISO 13849-1

EU Conformity	
	acc. to directive 2014/35/EU

Approvals	
	$_{c}CSA_{US}$ A300 (same polarity)
	CCC

Notes
The degree of protection specified (IP code) applies only to a properly closed cover and the use of an equivalent cable gland.