Itelcond

RoHS
compliant

100% made in Italy

Aluminium Electrolytic Capacitors

Data Book 2014/2015

Screw Terminal Series	4
Solder Pin Series	5
Electrical Characteristics	6
Capacitance	6
Equivalent Series Resistance	6
Dissipation Factor (DF)	7
Impedance (Z)	7
Superimposed Alternating Current (IRipple)	7
Voltage	8
Rated Voltage	8
Surge Voltage	8
Reverse Voltage	9
Expected Life	9
Marking	9
Capacitance Tolerance	9
Leakage Current (If)	9
Outgoinfig Leakage Current	10
Operatng Leakage Current	10
Leakage Current Multipliers	10
Leakage Current decrease Vs Voltage Derating	10
Leakage Current at Voltage-free storage	11
Storage Temperature	11
Shelf Life	11
Reliability	12
Operational Life	12
Confidence Level	14
Assessed Failure Rate	14
Failure Rate (λ)	14
Failure in Time (FIT)	14
Typical FIT Values	15
Mean Time Between Failure (MTBF)	15
Test	16
Shelf Test	16
Surge Voltage Test	16
Vibration Test	16
Screw Terminals	16
Solder Pins	16
Sealing Test	16

Low Pressure	16
Lifetest	17
Lifetest Procedures	17
Electrical Parameters Change	17
Operational Lifetime and Voltage Derating	18
Useful Life Calculation	19
Capacitor Connection	21
Insulation Strenght	21
Self Recharging(Dielectric Absorption)	21
Cleaning Agents	22
Databook Ordering Code	22
Packaging	23
Waveforms	23
Electrolytes	24
Flammability	25
Materials	25
Production Line Flow Chart	26
Capacitor Assembly	27
Mechanical Assembly	27
Precautions	27
Terms and Conditions 29	29

Specification, dimensions and drawings are subjected to change without prior information.

All information given in this data book is valid until December 2015

Screw Terminal Series

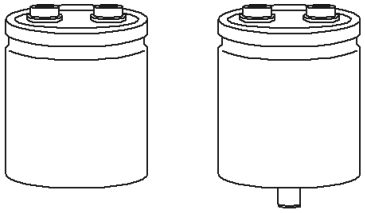

Series	Capacitance Range [µF]	Voltage range [V]	Temperature range [°C]	Case DxH [mm]	Expected lifetime [hrs]	Applications
AR	100 470000	40–450	-25°,+85° Self extinguishing construction and electrolyte	35x56 76x147	5000hrs	• High CV • Long life • Extra long life • High temperature • High ripple • High reliability • Compact size • Heavy transient • Industrial applications ○ Wind and Solar energy ○ Power supplies ○ Energy storage ○ Railways applications ○ Medical Applications ○ Frequency converters
AY	1000-1000000	40–500	-25°,+85° Self extinguishing construction and electrolyte	51x105 90x222	10000hrs	
AP	1000-15000	350–500	–25°,+85° Self extinguishing construction and electrolyte	64x107 90x222	12000hrs	
AS	150-330000	25-500	–25°,+85° Self extinguishing construction and electrolyte	35x56 90x222	15000hrs	
AF	1000-15000	350-500	-25°,+85° Self extinguishing construction and electrolyte	64x107 90x222	20000hrs	
AZ	1000-15000	160-450	-25°,+105°	51x105 90x222	3000hrs	
AT	100–10'000	350–450	-40°,+105°	64x107 90x222	5000hrs	

Solder Pin Series

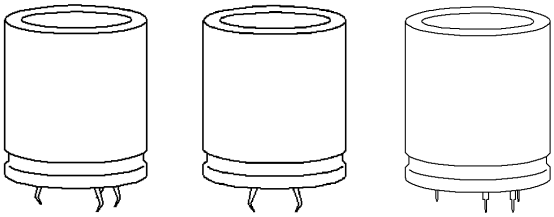

Series	Capacitance Range [µF]	Voltage range [V]	Temperature range [°C]	Case ΦxH [mm]	Expected lifetime [hrs]	Applications
ARC/S/K	100-3300	200	-25°,+85° Self extinguishing construction and electrolyte	30x40 45x100	2000	• Solder pin mounting • 2-4-5 pins configuration • Long Life • Extra long life • Low ESR • Compact size • Large size • Industrial applications ○ Wind and Solar energy ○ Power supplies ○ Medical Applications ○ Frequency converters ○ Telecommunications ○ Energy saving • Consumer Electronics
AKS	100- 47000	40-450	-25°,+85° Self extinguishing construction and electrolyte	30x40 40x100	5000	
ACC ACS	150- 33000	25 - 500	-25°,+85° Self extinguishing construction and electrolyte	30x40 45x100	5000	
AZK	100 - 2200	200 450	-25,+105	30x40 40x100	3000	
AZC AZS	100 - 4700	200 450	-25,+105	30x40 40x100	3000	
ATK	100 - 2200	160 450	-40,+105	30x40 40x100	5000	
ATC ATS	100 - 1500	200 450	-40,+105	30x40 40x100	5000	

Capacitance

The DC equivalent circuit of an aluminium electrolytic capacitor is shown in Figure 1

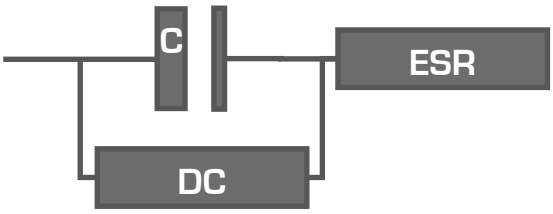

Figure 1

Where:

- DC leakage is the leakage current I_r
- C is the capacitance
- ESR is the series resistance

The capacitance of a capacitor is the number of Coulomb/Volt that a capacitor may store. This value is normally expressed in microFarad ($1\mu F=10^{-6}F$) and the rated value is marked on the capacitor. The capacitance value depends on the ambient temperature in which the capacitor shall operate: the possible variations for every ITELCOND type are indicated in the graphs of individual data sheets: the largest deviations are at low temperature while at high temperature they are negligible.

It should be mentioned that the capacitance varies not only according to the temperature and frequency but even to the operational life of the capacitor: during the service life of the capacitor capacitance shows a regular decay determined by a series of concomitant causes; such drift is less marked if the operational voltage decreases.

The percent values of capacitance drift for ITELCOND capacitors, after life tests of 2000/5000/10000hrs according to the type, are largely within the tolerance limits indicated in our catalogue and they are definitely lower than stated by DIN or CECC specifications.

Measurement shall be made at frequency of 100Hz and at a temperature of 25°C±2°C.

Equivalent Series Resistance (ESR)

The equivalent series resistance of a capacitor is the resistance that a capacitor opposes to the passage of the alternating current and represents the "component producing heat when an alternating current is seen by a capacitor". Its percent variation vs. frequency and temperature is shown on Figure 2.

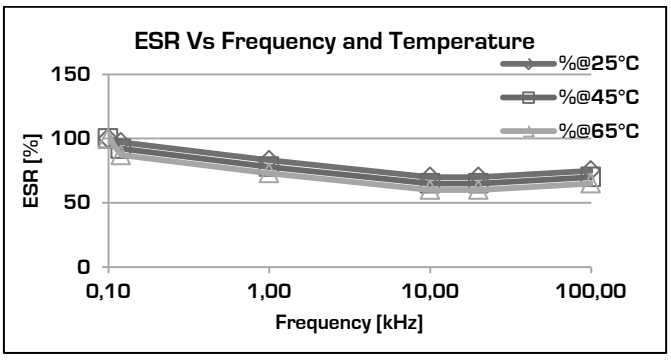

Figure 2

Dissipation Factor (DF)

It is the ratio of the equivalent series resistance to the capacitive reactance as per Equation 1.

$$DF = tg\delta = ESR / X_C$$

Equation 1

Where the dissipation factor depends on temperature and frequency. Considering Equation 2

$$X_C = 1 / (2 \bullet \pi \bullet f \bullet C)$$

Equation 2

the dissipation factor becomes:

$$DF = tg\delta = 2 \bullet \pi \bullet f \bullet C \bullet ESR$$

Equation 3

This relation shows the variation of the dissipation factor with the ESR and the capacitance.
Measurement shall be made at frequency of 100Hz and at a temperature of 25°C±2°C

Impedance (Z)

The impedance of an electrolytic capacitor depends on capacitance, ESR and ESL in accordance with the Equation 4.

$$Z = \sqrt{2\left\{(ESR)^2 + \left[\left(1/(2 \bullet \pi \bullet f \bullet C)\right)^2 - (2 \bullet \pi \bullet f \bullet ESL)^2\right]\right\}}$$

Equation 4

Where:

- E.S.L.is the equivalent series inductance

Superimposed Alternating Current (IRipple)

The superimposed alternating current is the root mean square (rms) value of the alternating current which may be applied to the capacitor. The maximum value tabulated in each data sheets for the different ITELCOND types applies at frequency of 100Hz and ambient temperature of 85 °C, with sine waveforms.
The conversion coefficients given for each type must be applied if temperature and used frequency differ from the conventional one. If, moreover, even the waveform is not sinusoidal the new waveform and the rms values are to be considered.
The maximum value of the alternating current that may be applied to the capacitor shall be determined by Equation5:

$$P = I_{rms}^2 \bullet ESR + V \bullet I_f$$

Equation5

The value $V \bullet I_f$ is negligible compared with $I_{rms}^2 \bullet ESR$ so the above equation can be simplified to Equation 6

$$P = I_{rms}^2 \bullet ESR = \Delta T \bullet S \bullet \mu$$

Equation 6

giving, finally Equation 7

$$I_{rms} = \sqrt[2]{\Delta T \bullet S \bullet \mu / ESR} = \sqrt[2]{\Delta T \bullet S \bullet 2 \bullet \pi \bullet f \bullet C / tg\delta}$$ *Equation 7*

Where:

- ΔT is the difference between ambient temperature and the temperature of capacitor surface [°C]
- S is the capacitor surface [cm^2]
- $tg\delta$ is the value of dissipation factor
- μ is the dissipation coefficient [$W/cm^2 * °C$]
- f is the frequency [Hz]
- I^2_{rms} is the superimposed alternating current [A]
- ESR is the equivalent series resistance [mΩ]
- P is the dissipated power [W]

Temperature variation influences the dissipation coefficient while the dissipation factor (or tgδ) is influenced by the variation both of temperature and frequency (see par.1.2).

The DIN (41332, 41270, 42348, 41250) and CECC (30300-016 and 30300-017) specifications give the maximum values of superimposed alternating current that may be applied to the capacitor: the values correspond or are inferior to those indicated for the ITELCOND capacitors.

When the ripple current is a sum of rms values at different frequencies, the equivalent current seen by the capacitor is calculated as per Equation 8.

$$I_{rms100Hz} = \sqrt[2]{\sum_{f=1Hz}^{nHz} \left(I_f / K_f \right)^2}$$ *Equation 8*

Where

$$K_f = ESR_f / ESR_{100Hz}$$ *Equation 9*

K_f is listed for each product family.

Voltage

Rated Voltage (V_n)

Is the maximum operating voltage for continuos duty at the rated temperature.

Surge Voltage (V_S)

The overvoltages due to transients or peaks due to superimposed alternating component must be always inferior to surge voltage. The surge voltage maximum value for each rated voltage is given in the table of electrical data

Reverse Voltage

Reverse voltage not exceeding 1,5 Volts may be applied to the capacitors without significant change in normal performance characteristics.

NOTE: for special applications (e.g. magnetising equipment) where a certain percentage of reverse voltage shall be applied, capacitors in accordance with customer requirements may be designed.

Expected Life

From the life test and the life test procedure (see introduction) the life expectancy graphs have been drawn. These graphs correlate ambient temperature, applied ripple current and expected life: the ripple current is expressed as a ratio between the ripple current at the ambient temperature and the ripple current at the category temperature.

Marking

ITELCOND capacitors shall be marked as per Table 1.

ITELCOND
Series
Rated capacitance [µF][1]
Rated DC working voltage [V]
P.N.[2]
Date code of manufacture

Table 1

Capacitance Tolerance

Capacitance tolerances can differ in accordance with customer requirement.

Standard tolerances are :

Screw terminal		Solder pins		Customer request
M=±20%	standard	M=±20%	standard	
X=10%,+30%	on request	X=-10%,+30%	on request	A = Special Tolerance

Table 2

Leakage Current

This is the current flowing through the insulation resistance when a direct voltage is applied to the capacitor.

Note: the insulation resistance is the resistance to the flow of a direct current offered by two conductors separated by a layer of insulating material.

Due to the special features of the aluminium oxide layer acting as dielectric, a small current always flows, in electrolytic capacitors, even after applying a direct current for a very long period.

It should be mentioned that a gradual increase of direct voltage applied to the capacitors, till a well fixed value (which must be in no case higher than the working voltage of the capacitor) causes at the two poles of the capacitor a high current flow at first, then the leakage current decreases rapidly as the voltage reaches its maximum rated value.

Just after the first sharp decrease the current goes on diminishing in intensity following a nearly exponential curve till it reaches an asymptotic value largely inferior to the initial one.

---

[1] Capacitance tolerance when different from -10%+30%

[2] When required

The curve gradient of the leakage current decrease versus time can be considered as a measure of the quality of the capacitor: the steeper is the curve gradient the better is the capacitor; curves showing a slow decrease of leakage current in a due time indicates that the capacitor doesn't meet high quality standards.
The ITELCOND capacitors of all types, specially the "GENERAL PURPOSE" or the "LONG LIFE" series, have leakage current values largely inferior to the maximum values requested by international and national specifications
Anyway during the first period (minutes) of the equipment turning-on the leakage current rating can be sensibly higher than normal and this is to be taken into account for a correct design of the circuit.

Outgoing Leakage Current

This is the leakage current measured at the acceptance test: in accordance with IEC 60384 the leakage current is to be measured at 20°C after the rated voltage of units has been applied for 5 minutes.
When the ambient (or capacitor's body) temperature differs from 20°C the conversion Table 3 applies.

Operating Leakage Current

Is the leakage current that is reached by the capacitor after a continuous operation.
The maximum limit for operating limit current is to be found on each section.

Leakage Current Multipliers

The leakage current value of an aluminium electrolytic capacitor is influenced by ambient temperature and by ratio of working voltage to rated voltage. Table 3 give some indication of the multipliers that can be generally applied to each series.

Tamb [°C]	AR-AY	AS	AP	AZ	AKS	ACC	AZC/AZK	ATC/ATK
20	1	1	1	1	1	1	1	1
30	1.2	1.2	1.2	1.2	1.2	1.2	1.2	1.2
40	1.4	1.4	1.2	1.4	1.4	1.4	1.4	1.4
50	1.8	1.8	1.6	1.8	1.8	1.8	1.8	1.8
60	2.5	2.4	2.2	2.4	2.5	2.5	2.4	2.4
70	3.5	3.0	2,8	3.0	3.5	3.5	3.2	3.0
85	5.0	4.0	3,9	4.5	5.0	5.0	4.7	4.5
95	N.A.	N.A.	N.A.	6.8	N.A.	N.A.	7.0	6.2
105	N.A.	N.A.	N.A.	9.0	N.A.	N.A.	9.5	8.3

Table 3

Leakage current decrease Vs. Voltage derating

If the voltage applied to the capacitor is lower than the rated one, the leakage current decreases accordingly and the approximate reduction factor is shown in Table 4.

VAPPLIED/VRATED	1	0,9	0,8	0,7	0,6	0,5	0,4
Multiplier	1	0,75	0,70	0,55	0,45	0,30	0,20

Table 4

Leakage Current At Voltage-Free Storage

The capacitors can be stored voltage-free for 2 years at least without any reduction in reliability. If these storage periods have not been exceeded, the capacitors can be operated at rated voltage directly without a re-anodization process.
During the first minutes of the turning-on period, however, the current ratings can be extremely superior to normal ones. This has to be taken into account when designing the circuit.
Due to long period of storage (in particular at high storage and/or high humidity temperature) the leakage current may increase and this phenomenon becomes more noticeable in high voltage capacitors. It's possible, re-applying voltage with a series resistor for a short period (one/two hours could be enough), to re-obtain the initial value.

Storage Temperature

Aluminium Electrolytic Capacitors can be stored up to the maximum category temperature with no voltage applied. It must be considered that storage at high temperature can affect electrical characteristics (namely leakage current) and consequently reliability of the unit. To avoid these undesirable inconvenient, the suggested stock temperature should be higher than +25°C and not exceeding +40°C. Temperature as low as minimum category temperature (-60°C) does not damage the units.

Shelf Life

The shelf life of aluminium electrolytic capacitors is limited and depends from stock conditions.
In a normal warehouse situation (i.e max 35°C,60% R.H.) the limits as per Table 5 apply.

Years	Limits
1	Units will meet initial electrical parameters level
2	Electrical parameters check is required to understand if re-ageing is required
3-5	Re-ageing is required before use
> 5	End of shelf life

Table 5

Re-Ageing Procedure

The re-ageing procedure must be done @ room temperature and following steps 1. through 5.:

1. connect units to a DC power supply through a resistor of :
    a. 10kΩ for units having working voltage lower than 100V
    b. 100kΩ for units having working voltage lower higher than 100V
2. increase the voltage checking that the charging current is not exceding the maximum initial DC leakage limit of the unit
3. when the rated voltage is reached keep it for at least 4(four) hours
4. discharge the unit through a 10kW keeping voltage decrease under control until discharge is complete
5. test units for DC leakage according to the specification

Important

When performing re-ageing operation of units keep in mind the operator is exposed to live voltage if unit is not properly insulated from surrounding. When operator is handling units he must wear insulating glooves and glasses to prevent any body damage due to possible and sudden unit explosion

Reliability

Technical data given for capacitors of different ITELCOND types agree with CECC norms (where applicable and/or available) following Table 6.

Series	CECC
Screw terminal type	30301-802/807/810
Solder pin type	30301-805/808/809/811

Table 6

The relative failure rate given in DIN specifications and fully met by ITELCOND capacitors of different series are reported here below in Table 7.

General Specification Requirements		
Working Voltage	Failure Rate	Series
<25Vdc	0.5%	Long life
30<Vdc<450	0.2%	Long life
6.3<Vdc<450	2.0%	General use

Table 7

In the following paragraphs there are the main terms occurring when considering problems concerned with reliability.
It should be considered that the values each parameter assumes in reliability are statistical figures and so they are valid only if great numbers or lots are considered.

Operational Life

The Operational Life is the period of time in which a capacitor reaches the maximum accepted values of modification of its electrical parameters.
To forecast the predictable operational life, MIL-STD-690 specifications with a "confidence level" of 60% (see next paragraph) are considered.
The following Figure 3 and Figure 4 based on before said specifications, indicate both the "failure rate" versus the testing time and the way to forecast the likely “failure rate" versus the number of "unit-hour", the "confidence level" and number of faulty ones.

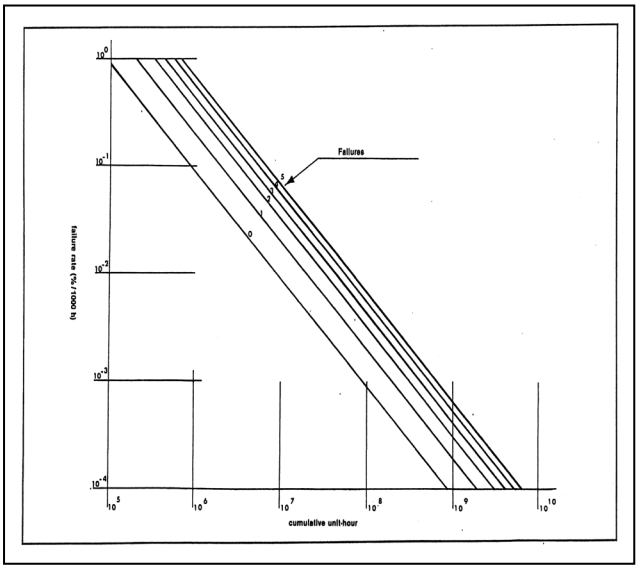

Figure 3

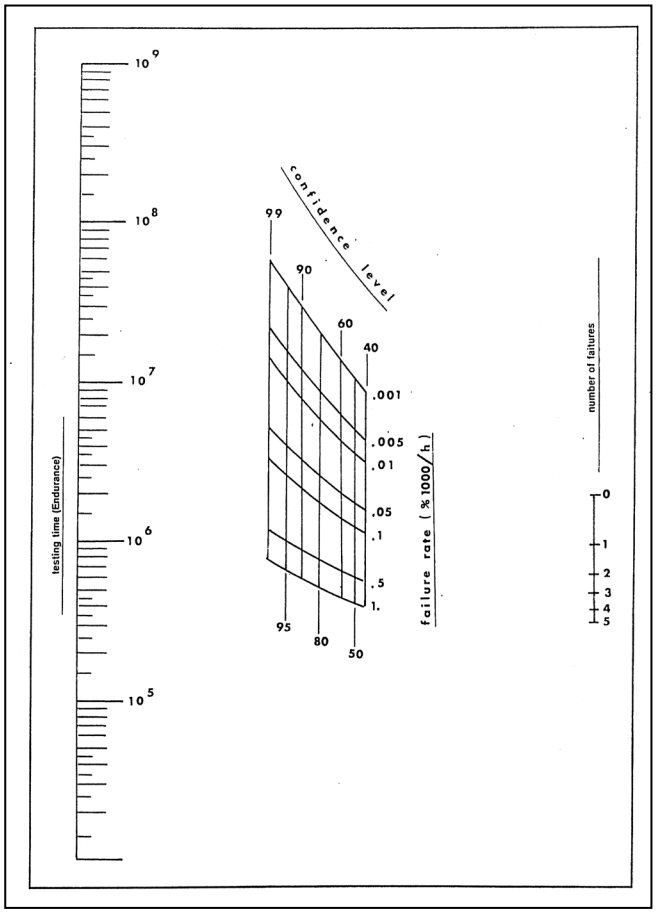

Figure 4

Figure 4 shows the relation among the various factors already considered:

- Unit-hours
- Confidence level
- Failure rate
- Number of defective units

Example: it may be considered, for example, a test period of 10^8 unit-hours, in which only a defective unit has been found on all the samples tested. If a line between the scale of the component-hours (10^8) and the scale of the faulty ones is drawn, the different combinations between "failure rate" and "confidence level" can be obtained, as per Table 8:

Failure Rate	0.005	0.004	0.002
Confidence Level	95%	90%	60%

Table 8

Clearly the same nomogram (based on MIL-STD) can be used to obtain the lowest number of "component-hour" to predict the maximum number of defectives with a certain confidence level etc.

For every ITELCOND type for which a rated operational life is given at rated temperature the figures in the detail section show the variation of the operational life according to a certain decrease of the ambient temperature on a load of full category voltage; obviously a decrease of the ambient temperature and a reduced voltage improve the given data.

As a further guarantee it should be mentioned that:

- Every series of capacitors undergoes regularly operational life test for a period of time longer than that in catalogue
- The variations of the electrical parameters found at the end of the before said ITELCOND tests, are well within the limits given for the individual types at the end of standard internal tests.

Confidence Level

The term "confidence level" indicates a probability that a component will fail the homologation when its assessed failure rate is equal to the failure rate required for the homologation.

Assessed Failure Rate

The term indicates the failure that should be found if all the units produced in a process "under control" would actually be tested.
NOTE: a "under control process" is a process in which there are random variations of the average failure rate

Failure Rate (λ)

The failure rate is the number of failed units indicated in percent for every 1000hrs test: this definition is valid only for a well-defined confidence level. The failure rate values depends on ambient temperature and on ratio of applied voltage to rated voltage.
Reference conditions are given in Table 9.

T [°C]	Vapplied/Vrated
40	0,50

Table 9

Figure 5 shows the variation of λ (or fit, see next paragraph) versus applied voltage (in %).

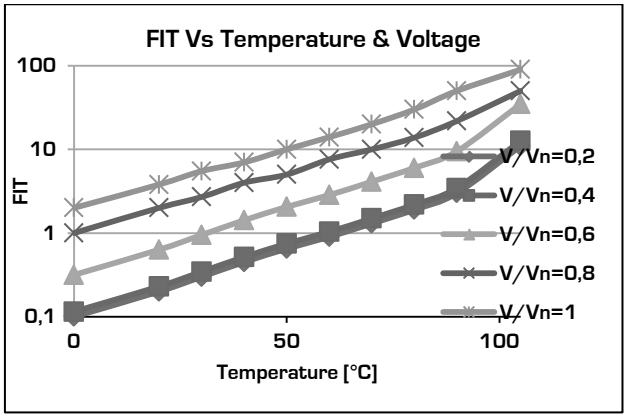

Figure 5

Failure in time (FIT)

FIT is the general expression of the failure rate with a confidence level of 60 % (MIL-STD-690) as per Equation 10 and Equation 11, a sample of calculation is reported in Equation 12.

It's a calculation from field observation and results of periodical tests in our laboratory.

The failure rate mainly depends from failure criteria and the operating and ambient conditions.

$$FIT = \frac{\text{number of failures (confidence level 60\%)}}{(\text{tested components} \bullet \text{test duration})}$$

Equation 10

$$1FIT = 1 \bullet 10^{-9} hrs$$

Equation 11

Example:

$$100FIT = 1 \bullet 10^{-7} hrs = 0{,}01\% \bullet 10^{-3} hrs = {}^{0{,}01\%}\!/_{1000hrs}$$

Equation 12

Typical FIT Values

Years of experience have shown that values in Table 10 can be considered, during the intrinsic failure period of a typical bathtub statistical curve.

ITELCOND series	Voltage	FIT	ITELCOND series	Voltage	FIT
AR,AY	<150 Vdc	40	AZK	<150 Vdc	50
	≥150 Vdc	70		≥150 Vdc	80
AS	<150 Vdc	45	ATK	<150 Vdc	40
	≥150 Vdc	45		≥150 Vdc	70
AP	ALL VOLTAGES	45	ACC	ALL VOLTAGES	50
AF	ALL VOLTAGES	45	AZC	<150 Vdc	50
AT	ALL VOLTAGES	20		≥150 Vdc	80
			ATC	<150 Vdc	40
AKS	<150 Vdc	50		≥150 Vdc	70

Table 10

Mean Time Between Failure (MTBF)

The MTBF is given in Equation 13.

$$MTBF = 1/\lambda$$

Equation 13

where λ is the failure rate.

Mean Time To The First Failed Component (MTTF)

The value of MTTF is given in

Equation 14

$$MTTF = {}^{100'000}\!/_{(\%/1000hrs)} = {}^{100'000}\!/_{\lambda}$$

Test

Shelf Test

Capacitors shall be subjected to the maximum operating temperature ±1°C for 96±4 hours.
No voltage shall be applied and the electrical parameters must be within the specified range (see IEC 68-2-2 and subq.)

Surge Voltage Test

The capacitor shall be subjected to 1000 cycles each consisting of 30s charge, followed by a no load period of 330s at surge voltage, as defined in detail specification. Test temperature is room temperature for general use capacitors and upper category temperature for long life capacitors. A series resistor must be connected to the capacitor with a value of:

- 1000Ω for C<3300μF
- $2{,}5 \bullet 10^6 / C$ Ω for C>3300μF

After test, a recovery period of 2hrs is required before taking any measurement. The requirements are:

- no electrolyte leakage,
- leakage current lower than stated limit
- tangent of the loss angle lower than stated limit
- ΔC/C=<15% (CECC 30300-4.14)

Vibration Test

Screw Terminals

Capacitors, mounted with a proper ring clip (or with the mounting stud) shall be subjected to a vibration test in accordance with IEC 411.
All parameters, measured after each cycle, must be within the limits and the leakage current must be lower than the maximum limits.

Solder pins

Capacitors, mounted on to a printed wiring board shall be subjected to a vibration test in accordance with IEC60684-2-6/test F_c.
All parameters, measured after each cycle, must be within the limits and the leakage current must be lower than the maximum limits

Sealing Test

The capacitors shall be tested for seal tightness in accordance with IEC 68-2-17.

Low Pressure

In accordance with IEC 60384-4 subclause 4.11.4 capacitors can operate at a minimum pressure of 8.5 kPa for short period.

Important:

- Continous operation at extreme altitude can impair useful life.
- The capability to withstand to low pressure is for unit mounted in accordance with related specification.

Life Test

Life Test Procedures

The following notes are intended as a clarification of tests employed at ITELCOND Quality Control Laboratory to ascertain the quality of the finished products along the years. The life test duration for each series is in accordance with IEC 60384-4 requirements.

LONG LIFE SERIES = 2000 hours at maximum category temperature

GENERAL USE = 1000 hours at maximum category temperature

In addition, ITELCOND quality program provides that life tests are performed for a minimum number of hours, usually higher than required by IEC, in accordance with Table 11.

Series	Working Voltage	Temperature	Hours of test	Series	Working Voltage	Temperature	Hours of test
AR	<150	85°	2000	AKS	All voltages	85°	2000
AR	>150	85°	2000	AZK	All voltages	105°	2000
AS	<150	85°	10000	ATK	All voltages	105°	2000
AS/AP	>150	85°	5000	ACC	All voltages	85°	2000
AF	>150	85°	5000	AZC	All voltages	105°	2000
AY	All voltages	85°	2000	ATC	All voltages	105°	2000
AZ	All voltages	105°	2000	ARC	All voltages	85°	2000
AT	All voltages	105°	5000				

Table 11

From the data obtained performing these life tests ITELCOND Quality Control had the possibility to draw the tables shown for each series. The "EXPECTED LIFE TABLES" are calculated with the same "electrical parameters changes" used for life test procedure and shown here below.

Electrical Parameters Change

The electrical parameters variations during life test are strictly connected with the quality of finished units and must be within maximum limits given in Table 12

Working Voltage	Capacitance Change	Tanδ/ESR Change	ILeakage Change
Screw inserts			
2000 hrs			
<150V	±15%	1,3 • data book limit	Less than initial specified limit
≥150V	±10 %	1.3 • data book limit	Less than initial specified limit
5000 hrs			
<150Vdc	±15 %	1.3 • data book limit	Less than initial specified limit
≥150Vdc	±15 %	1.3 • data book limit	Less than initial specified limit
10000 hrs			
< 150 Vdc	•15 %	1.5 • data book limit	Less than initial specified limit
Solder Pins			
All voltages	±10 %	2.0 • data book limit	Less than initial specified limit

Table 12

The above electrical parameter changes are considered as final limits when the expected life curves are drawn. From the data obtained performing these life tests ITELCOND Quality Control had drawn the tablesnamed "Expected Life Tables and shown for each series. The "Expected Life Tables" are calculated with the same "electrical parameters changes" used for life test procedure and here indicated.

The expected life values that appear on standard graphs must be multiplied by 2.0 for all series if the parameter's change is in Table 13.

Quantity	Working Voltage<150V	Working Voltage≥150V
Capacitance	±15%	±10%
ESR	≤3 • data book limit	≤3 • data book limit
DC	≤Data book limit	≤Data book limit
Total failure in percent	≤1%	≤3%

Table 13

Operational Life Time and Voltage Derating

Operating life time depends on the capacitor general working conditions; if the capacitor is subjected to a temperature or to a voltage lower than rated (see par.1.8) there is a consistent increase in life. Assuming that life is doubled at every temperature decrease of 10°C, when the applied voltage is lower than the rated one the expected life increase is shown on Graph 1 and Graph 2.

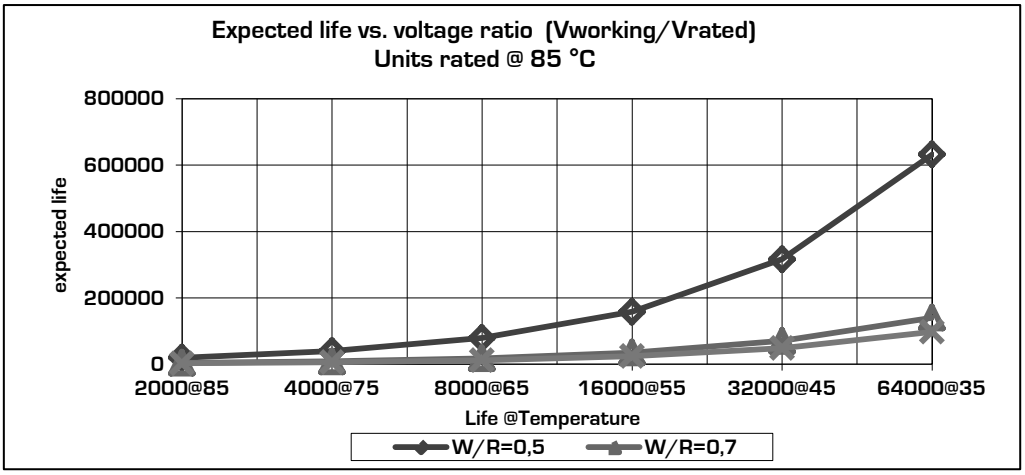

Graph 1

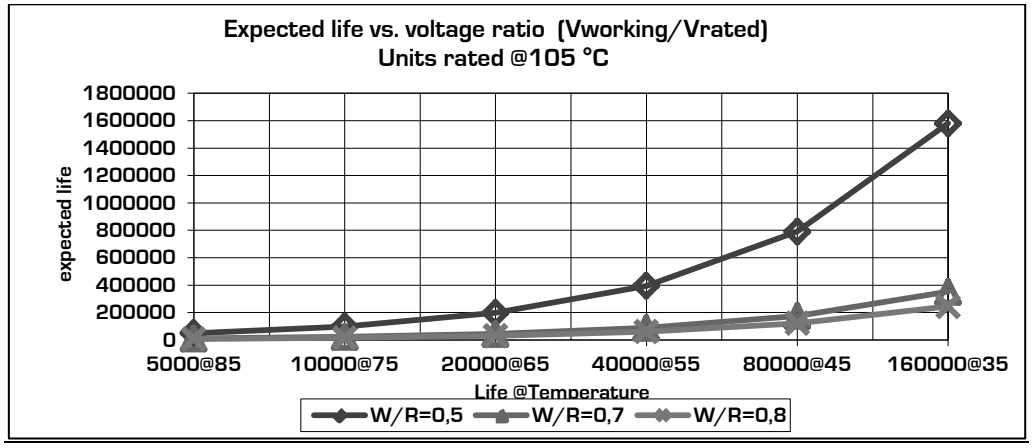

Graph 2

Useful Life Calculation

The useful life of a capacitor is calculated in accordance with the tables of expected life per each series.

The rated ripple current at upper category is listed in the data sheets, while the ripple current at different temperature can be calculated using the tables shown on each series.

To know the useful life proceed as follows :

- calculate the ratio $[I_R]/[I_{85°C}]$ or $[I_R]/[I_{105°C}]$
- find on to the table the crossing between the working temperature an the calculated ratio
- on top of the table it appears the useful life in hour

The example does not consider the frequency dependence of ripple current : the corresponding factor listed on each type must be used as an additional factor.

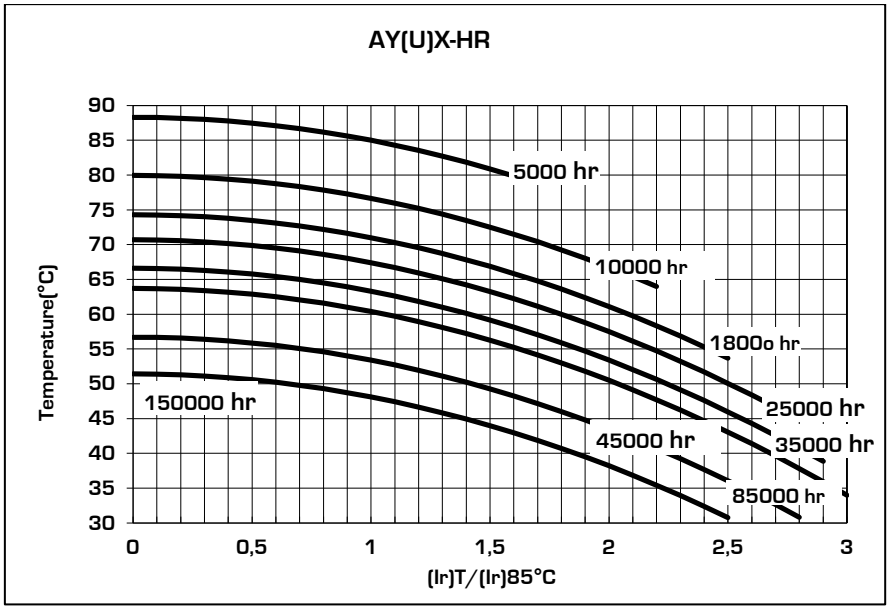

Example 1:

- **Capacitor AY(U)X-HR472M350DF1**
- **Working conditions: I_{Ripple}=25A@100Hz**
- **Ambient temperature =70°C**

VN=350V

Capacitance	Case	Tanδ	ESRmax/typ		Zmax	Iripple55°C/85°C		Ordering Code
[µF]@100Hz		[%]@100Hz	[mΩ]@100Hz		[mΩ]@10KHz	[A]@100Hz	[A]@100Hz	(U) for mountig stud
4700	DF	0,08	27	20	17	23,9	17,1	AY(U)X-HR472M350DF1

1. $\boxed{I_{Ripple} / I_{Ripple@85°C} = 25/17{,}1 = 1{,}46}$

   a. **Crossing 1,46 and T=70°C expected life is about 10000 hours**

Example 2:

- **Capacitor AY(U)X-HR472M350DF1**
- **Working conditions: IRipple=25A@500Hz**
- **Ambient temperature =70°C**

VN=350V

Capacitance	Case	Tanδ	ESRmax/typ		Zmax	Iripple55°C/85°C		Ordering Code
[µF]@100Hz		[%]@100Hz	[mΩ]@100Hz		[mΩ]@10KHz	[A]@100Hz	[A]@100Hz	(U) for mountig stud
4700	DF	0,08	27	20	17	23,9	17,1	AY(U)X-HR472M350DF1

1. $\boxed{I_{Ripple} = 25/1{,}32 = 18{,}9}$

2. $\boxed{I_{Ripple} / I_{Ripple@85°C} = 18{,}9 / 17{,}1 = 1{,}10}$

   a. Crossing 1,10 and T = 70 °C expected life is about 14000 hours

Example 3:

- Capacitor AY(U)X-HR472M350DF1
- Working conditions: IRipple=25A@500Hz
- Ambient temperature =60°C

VN=350V

Capacitance	Case	Tanδ	ESRmax/typ		Zmax	Iripple55°C/85°C		Ordering Code
[µF]@100Hz		[%]@100Hz	[mΩ]@100Hz		[mΩ]@10KHz	[A]@100Hz	[A]@100Hz	(U) for mountig stud
4700	DF	0,08	27	20	17	23,9	17,1	AY(U)X-HR472M350DF1

3. $\boxed{I_{Ripple} = 25 / 1{,}32 = 18{,}9}$

4. $\boxed{I_{Ripple} / I_{Ripple@85°C} = 18{,}9 / 17{,}1 = 1{,}10}$

   a. Crossing 1,10 and T =60 °C expected life is about 36000 hours

Capacitor Connection

The aluminium electrolytic capacitors can be connected in parallel : the connection must e as such that the current flows equally through each unit

The aluminium electrolytic capacitors can be connected in series: use balancing resistors to control the voltage distribution across each unit.

For more detailed information contact our engineering service

Insulation Strenght

-Insulation resistance @100V, 60". between terminals and mounting hardware =100 MΩ.

-Dielectric strength of the sleeve =2500VDC.

Self recharging (Dielectric Absorption)

It is important to take note that Aluminium Electrolytic Capacitors undergo to the phenomenon of self recharging .

Generally speaking it is impossible to give a precise rule to predict which voltage an unit, even when completely charged and discharged, can reach if left open circuit.

Itelcond has observed a maximum of 30 volt across the terminals but sometimes the value could be higher and not predictable.

It is therefore suggested to discharge the units before touching or connect ing the terminals.

Cleaning Agents

Halogenated solvents are not recommended for use in cleaning capacitors, while many solvents such as alcohol are suitable. It must be remembered that many solvents given, as chemically stable in the most varied conditions may on the contrary be electrochemically dissociated, producing chemical products extremely dangerous to the capacitor life. The following list contains critical halogenated solvents (unsafe) used as cleaning agents in electrical industry:Trichloroethane (ex. Chlorotene)

- Freon
- Trichloroethylene
- Tetrachloroetylene
- Chloroform
- Methylene chloride
- Methyl ethyl Ketone
- Acetone

In case of wetting capacitors with those solvents, a safe cleaning agent must be used to eliminate residues of non-safe agents.

List of solvents without halogen (safe):

Methanol

Propanol

Isobutanol

Databook Ordering Code

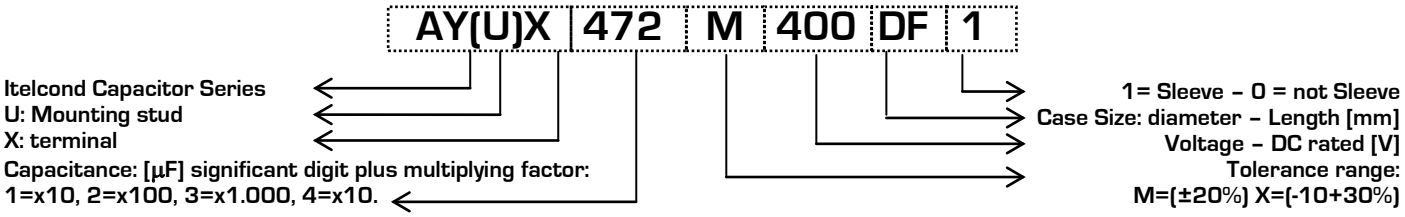

Packaging

Units are packed in cartoon boxes and the number of units per box is in accordance with following table. Units are packed in cartoon boxes and EUR dimensions wooden pallet (plastic on request).

Series	Diameter	Length	Pcs/Box	Weigth/Box [kg]
Screw terminal	A 35mm	A=55mm	50/100	4-7
		B=80mm	50	4-6
		C=105mm	50	6-8
	B 51mm	B=80mm	30	5-7
		C=105mm	30	6-9
	C 63mm	C=105mm	20	6-8
		F=145mm	20	9-10
	D 76mm	C=105mm	12	5-7
		F=145mm	12	6-14
		J=220mm	8	9-11
	E 90mm	C=105mm	6	7-9
		F=145mm	6	9-11
		J=220mm	6	8-12

Table 14

Series	Diameter	Length	Pcs/Box	Weight/Box [kg]
Solder pins	M 30mm	B=40mm	100	4-6
		C=50mm	100	4-6
	N 35mm	B=40mm	100	6-8
		C=50mm	100	6-8
		N=60mm	50	5-7
		E=75mm	50	6-8
	P 40mm	B=40 mm	100	6-8
		C=50mm	100	8-9
		E=75mm	50	9-11
		G=100mm	50	6-8
	Q 45mm	C=50mm	30	6-8
		E=75mm	30	7-9
		G=100mm	30	8-10

Table 15

The shown weight values depend from the type of unit packed into the box : the weight of units is a function of the capacitance value of the capacitor (e.g. into the same can size a capacitor having a capacitance of 2200µF units differs substantially from one having a capacitance of 10000µF.

Waveforms

The Fig.8 indicates the most popular waveforms and the applicable current both as average and rms. value.

Waveform	R.m.s value	Waveform	R.m.s value
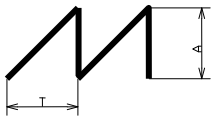	$A \bullet \sqrt{T/3}$	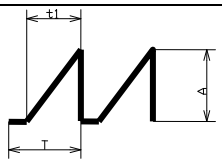	$A \bullet \sqrt{t1/(3 \bullet T)}$
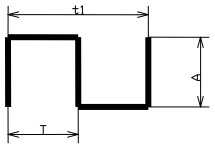	$A \bullet \sqrt{T/t1}$	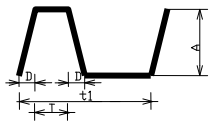	$A \bullet \sqrt{(2 \bullet D + 3 \bullet T)/(t1)}$
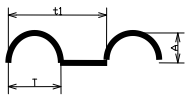	$A \bullet \sqrt{T/(2 \bullet t1)}$	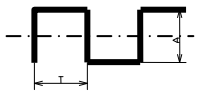	A

Table 16

Electrolytes

Electrolytes used in aluminium capacitors manufacturing are produced in accordance with Itelcond internal specifications

Since its foundation ITELCOND never used in its electrolytes formulation dangerous or potentially poisonous chemicals. So all electrolytes were and are free from:
Dimethylformamide (DMF)
Dimethylacetamide (DMAC)
Polychlorinated byphenil (PCB)

Non Flammable Materials

Raw Material For Screw Terminal

ITELCOND capacitors can be manufactured with outside raw materials that can meet UL specifications: more precisely

Component	Material	UL rating
Cover	Thermosetting	V0
Plastic sleeve	PVC	V0
Bottom insulating disk	PVC	V0
Plastic washers	Thermoplastic	V0
Hex nut	Thermoplastic	V0

Table 17

Raw Material For Solder Pin Types

The above concept can be also applied to all series having solder pins.

Component	Material	Ul rating
Cover	Rubber-bakelite	HB
Plastic sleeve	Pvc	V0
Bottom insulating disk	Pvc	V0

Table 18

Flammability

These notes are intended to clarify the "*flammability concept"* that is concerning most of Aluminium Electrolytic Capacitors users

Considering fire and possible fire hazard, the design engineer should know that:*UL detail specification concerning DC Aluminium Electrolytic Capacitors doesn't exist*

UL specifications cover fire hazard and test on not flammable material.

The test that can be used to control outside material used in Aluminium Electrolytic Capacitors European is covered by the specifications (IEC 60695-2-2)

The tests done on finished capacitors are to be considered useful only for comparison as it strongly depend on material dimensions and also by other materials that can be in contact: external material itself are UL approved as V0 or HB rated

Under standard applications (when soldering heat is not in excess, if the beading is not damaged, if an abnormous use conditions are not applied, if there has been an incorrect polarity application etc.) there is no leakage of the liquid that impregnates the rolled section ("the capacitor's body"): if that happens and if there is a possible fire source around the unit the ignition of the rolled section can start and will continue until the fire (or the flame or whatsoever is the possible ignition reason) stays in contact with the inside part of the capacitor.

As soon as the fire source is removed the rolled section stops to burn generally in less than 15 seconds.

It is of great importance to underline that the fire stops as soon as the source is removed ; if source of fire is newly applied the fire can restart.

Materials

To the best of Itelcond knowledge Alumnium Electrolyitc capacitors manufactured in his plant complains to :

Directive 2002/95/EC -January 2003

Directive 2003/11/EC –February 2003

Amendment of Directive 2002/95/EC -August 2005

Directive 2006/122/EC -December 2006

Itelcond certificates that during designing and/or manufacturing of aluminium electrolytic capacitors no

- Asbestos,
- Lead (Pb)
- Mercury (Hg),
- Chromium VI (Cr^{VI}),
- Dimethylacetamide (DMAC)
- Dimethylformamide (DMF)
- Polychlorinated Biphenyl (PCB),
- Polychlorinated Triphenyl (PCT),
- Polybrominated Biphenyl (PBB),
- Polybrominated Diphenyl (PBD),
- Polybrominated Diphenyl Ethers(PBDE)
- PentaBDE / OctaBDE / DecaBDE
- Materials currently listed as carcinogenic/mutagenic/teratogenic

are not intentionally added or used

Itelcond received also written assurance from suppliers that they don't use the above chemicals or substances in the manufacture of products Itelcond is currently buying to produce its own components.

Production Line Flow Chart

The figure 10 shows the aluminium electrolytic capacitor flow chart.

It has to be observed that all materials come from approved suppliers and cannot be used in production line unless specifically approved. All scrapped chemicals and/or electrolytes are stored in a controlled area and are sent to a plant that can treat them avoiding soil and water pollution.

Same procedure (as per ISO EN 14001 requirement) is followed for finished units or raw materials that must be, for some reasons, scrapped.

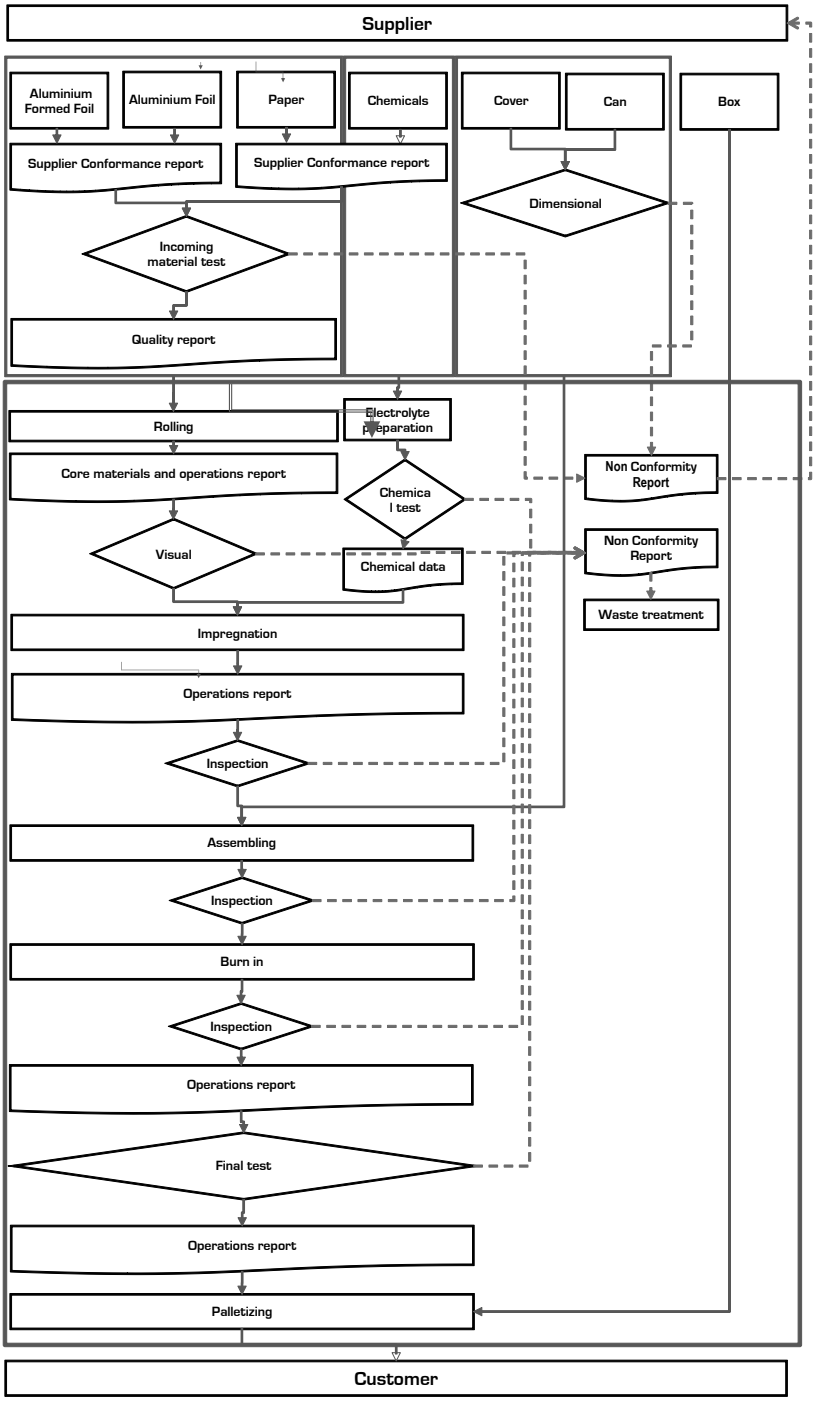

Figure 6

Capacitors Assembly

Mechanical Assembly

- When using high-capacitance and high-voltage electrolytic capacitors it is important to remember that the inner part (the rolled section) is not insulated from can: between the negative pole and the aluminium can there is a variable and not defined resistance essentially due to the electrolyte used in capacitor manufacture.
- Capacitor mounting must be apt to ensure that the terminals do not point downward (see Fig.13). In case of horizontal mounting the safety vent must be put in the shown position.

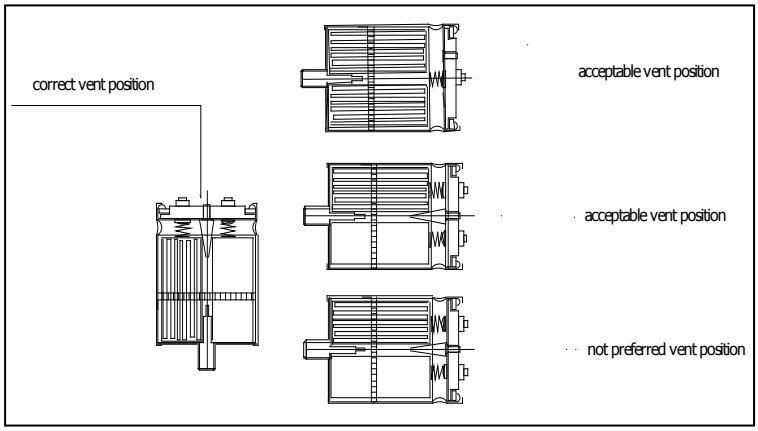

Figure 7

- Do not mount screw terminal capacitors downward : if that the case be sure that there is a venting hole in PC board
- Spacers (paper) and electrolyte present in aluminium electrolytic capacitors are flammable
- The electrolyte used in capacitors production are highly conductive and contains ammonia or ammonium salt in different forms : possibly leaking electrolyte can slowly corrode the copper paths on PC board.

Precautions

When using aluminium electrolytic capacitors a number of precautions must be taken :

- Operating temperature ,ripple current and working voltage must be within the specified limits
- Don't apply any reverse voltage or AC to the capacitors :there could be abnormal increase in temperature and even explosion of unit
- When protection against reverse voltage is required please contact our engineering.
- In any case AC cannot be applied
- Capacitors that undergo (occasionally or purposedly) to reverse voltage cannot be used any longer
- DC voltage plus AC component cannot exceed the working voltage of the unit
- Capacitors to be used in areas where there are harmful gases will undergo to a life reduction due to damages that can occur to sealing rubber or to gasket : the damage of these parts can cause the gas enter into the capacitor with consequent corrosion of capacitor's body
- When capacitor is used a highly dusty area check that the level of powders on the top of the unit is not overpassing insert shoulder height to avoid possible short circuit between plus and minus pole

- Moisture or salt spray can penetrate into the capacitor and cause short circuit of the unit
- When mounting screw terminal capacitors see par. 16
- When mounting snap in capacitor with a solder iron the hot tip cannot come in contact with the can, cover material or insulating sleeve
- When units are mounted on series – parallel use homogeneous date codes
- Handling of capacitors must be done carefully : unit falling on the floor or bumping against object can be damaged even when no particular visible modification of unit can be seen; if it happens replace units
- Capacitors cannot be stored under direct sun light
- To avoid electrical shock read carefully par. 6
- When an unit operates for long time at voltage consistently low and then sees an high voltage an increase in temperature must be expected
- When a snap in unit is fixed to the pwb by means of fixing material be sure that the fixing compound do not contain chloride or chemicals that can deliver chlorine during polymerisation process
- Cleaning circuit must be done with safe chemicals (see par. 7)
- Harzadous voltage specially on very high capacitance units is present for up to 60 minutes after disconnection from power supply
- Do not use capacitors having standard design in circuits where charge and discharge cycles have an high repetition rate; specific capacitors can be designed for this application
- When safety vent operates a gas at high temperature is emitted : the gas is driving out from capacitor boby some electrolyte that could damage the PC board or connecting bars not properly insulated from chemical attack.
- When a capacitor in bank fails check all capacitors and replace them : don't replace failed unit only

Terms and Conditions

1. The general conditions presently in force are applicable to all purchases effected by the Client (Buyer) from Itelcond S.r.l. (Seller). These general conditions must not be exceeded, modified, deferred or, in any other way, altered, except if an official document is underwritten and signed by the Seller. Under no circumstances the general conditions adopted by the Buyer, printed on his purchase orders or any other document, will be deemed applicable to none of the purchase orders placed with the Seller. The execution, also partial, of the Buyer's order, or any other fulfilment from the Seller's side towards the Buyer, will not be valid and therefore not interpreted as tacit or implicit acceptance of any general condition decided by the Buyer, unless specifically agreed upon the Seller's legal representative.
2. The products manufactured or sold by the Seller are not designed to be used into devices or equipments to be inserted surgically into the human body or, in other words, suitable to examine orpreserve the human life, or used in devices or systems for the nuclear applications. If the Buyer intends to utilise the Seller's products for its application in medical, nuclear, military and/or aerospatial fields, he may do so only with prior request and receipt of a document signed by the Seller's managing director, certifying that these products are suitable to be applied in the above fields,
3. The Seller will accept purchase orders only after written confirmation of the order, sent to the Buyer.
4. Delivery dates shown in the confirmation order are only indicative and not binding. The Seller will do his utmost in order to respect the confirmed delivery date but, at the same time, does not take any responsibility for the eventual non-observance of the date. The delivery is linked to the payment of eventual amounts which are due and are related to previous supplies. Likewise also prices indicated in the confirmation order might vary according to increases in the energy or raw materials prices or changes in curreny rates.
5. In absence of written agreements, orders are considered fulfilled with a tolerance of plus/minus 3% or plus/minus 5 pieces.
6. The technical specifications of the Seller's products are those contained in his last "Data Book" and are also traceable on his Web Site: www.itelcond.it . The technical specifications may also be those agreed upon between Seller and Buyer.
7. Seller's products will be free from vices and will be guaranteed for a period of 12 months from delivery date to the Buyer. The law decree No.24 of 02,02,2002 will not be enforced as these products are not considered as consumer goods. The warranty is effective exclusively towards the Seller's direct Buyer. Damages claimed by third parties, although if requested by Seller's direct Buyer, will be turned down.
8. The warranty does not cover products which are used incorrectly. Certain types of electric products, designed and manufactured to be used as basic components to be inserted in other electric devices, are anyway such that their performance is widely related to the way they are integrated in the final product and by its general characteristics. In the range of these basic components are included both active and passive components and notably the electrolytic capacitors.
9. Eventual defects or vices of goods vill be promptly notified in writing and anyhow not after 8 days from the date of receipt of goods. In case of hidden defects, the above timing will start from the date of the discovery of these defects. In case of vices ascertained and reported in due time, defects or lack in quantity or quality of products, the Seller is entitled to the sole substitution of such products, repair or writing back of such products at his choice.In line with the most ample applicability of the law, any different and further responsibility is excluded for damages occurring to the buyer or third parties with regard to the utilization of the Seller's products. Samples, prototypes and products in development, will be delivered as they are and uncovered from warranty.
10. In case of missed and damaged products and units considered not in line with the technical specifications, the Buyer is entitled to inform immediately the Seller, who will decide how to proceed about the matter. No rejected goods will be accepted, unless previously authorized by the Seller.If an authorization number for the rejection (RMA) has been notified to the Buyer, such a number must be reported both on packaging and on documents accompanying the units rejected to the Seller.Products, travelling at Buyer's risk and danger, must be returned complete, not tampered with, non welded, with their eventual accessories and adequately packed and delivered free factory of Seller.The assignment of the authorization number for rejection does not allow the Buyer to obtain the substitution of products, the credit of their value, and whatsoever responsibility on the Seller's side is not admitted.The Buyer is obliged to comply with the rules related to the re-exportation of the products to clients or countries, if the italian law forbids export and sale towards them.
11. Goods are sold free factory of Seller and therefore the transportation risk is at total Buyer's charge. The delivery of products will be considered in every respect accomplished once the products are collected by the carrier or by the same Buyer at the Seller's warehouse.
12. The sold products will remain property of the Seller until totally paid by the Buyer. In case of delayed or missed payment the Seller may, at his discretion, request to re-enter into possession of unpaid products.
13. The Seller will not be liable if events, not due to his will, will prevent him to accomplish, partially or totaly, the contractual obligations undertaken. The Seller will not assume responsibility for his products after the same are assembled on Buyer's equipments. The Seller will not be liable, no limitations admitted, for damages caused by the loss of warranty, contracts, or other legal matters, including loss of value, profit, capital, or expenses for the substitution of equipments.
14. Any dispute will be submitted to the law-court of Milan (Italy). Under any circumstance the contract will be exclusively governed by the italian law.

Notes

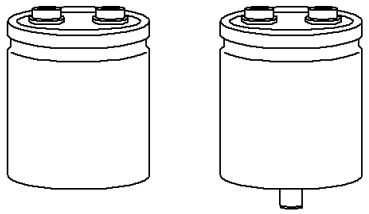

AR - ARU -

Series AR(U)- – 85°C 5000h

Capacitors screw terminal type

- AR - Flat Bottom
- ARU - Mounting Stud
- Capacitance Tolerance: -20 + 20% – standard (M)
- Capacitance Tolerance: -10 + 30% - on request (X)
- Self extinguishing construction and electrolyte
- Climatic category: 25/85/56
- Case: 35x59 – 76x147
- Temperature – 25°C + 85°C
- All welded construction reliable electrical contact

Mechanical Outlines

- Case: aluminium made
- Terminals: screw
- Sealing: hermetic by EPR gasket, on a resin cover
- Pressure Release Vent: silicone-rubber
- Sleeve: self-extinguishing thermo shrinkable
- Size: see enclosed drawings
- Mounting Hardware: see hardware section
- External Material UL94-V

Ordering Code: Example

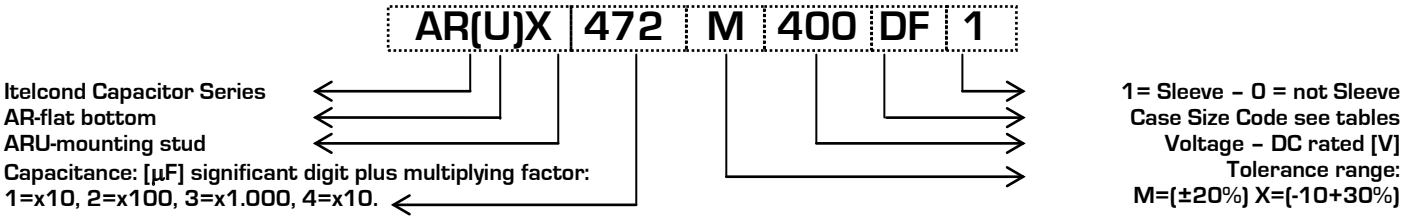

Ripple Current

The allowable values of ripple current in Amperes, are related to the temperature and frequency by following equation:

$$I_{Ripple} = K_t \bullet K_f \bullet I_{Ripple@85°C}$$

Where:

- IRipple@85°C is the limit given by tables, @ 85°C/100HZ
- Kt is the Temperature Correlation Factor
- Kf is the Frequency Correlation Factor

Note .Superimposed alternating voltage summed to DC volage must not exceed rated voltage, rated ripple current must not be exceeded and no reverse polarity is allowed

°C	40	55	65	75	85
Kt	2.10	1.80	1.60	1.30	1.00

Table 1-Kt Values

	Kf			
Vn/Hz	50<V=300	V>300	50<V=300	V>300
	Diameter Code A,B		Diameter Code C,D,E	
50	0.79	0.76	0.78	0.72
100	1.00	1.00	1.00	1.00
120	1.04	1.04	1.02	1.03
200	1.12	1.17	1.06	1.14
300	1.16	1.28	1.08	1.24
400	1.20	1.35	1.09	1.29
500	1.22	1.39	1.09	1.32
>1000	1.25	1.45	1.09	1.37

Table 2-Kf Values

Expected Lifetime End of Life Criteria

During useful life typical electrical parameters of electrolytic capacitor are subject to change.
End of Life criteria, when rated temperature, voltage and ripple are applied, are:

$\Delta C / C_{t0} \leq 30\%$ *Equation 1*

$ESR \leq 3 \bullet ESR_{t0}$ *Equation 2*

$I_f \leq I_{f t0}$ *Equation 3*

where t_0 is the initial value

Voltage Endurance Test Requirements

On Voltage Endurance Test are based Expected Lifetime Curves.
End of Life criteria, when rated temperature, and voltage are applied for 2'000hrs, are

$\Delta C / C_{t0} \leq 15\%$ *Equation 4*

$ESR \leq 1{,}3 \bullet ESR_{t0}$ *Equation 5*

$I_f \leq I_{f t0}$ *Equation 6*

where t_0 is the initial value

Expected Lifetime Vs Temperature and Ripple Current

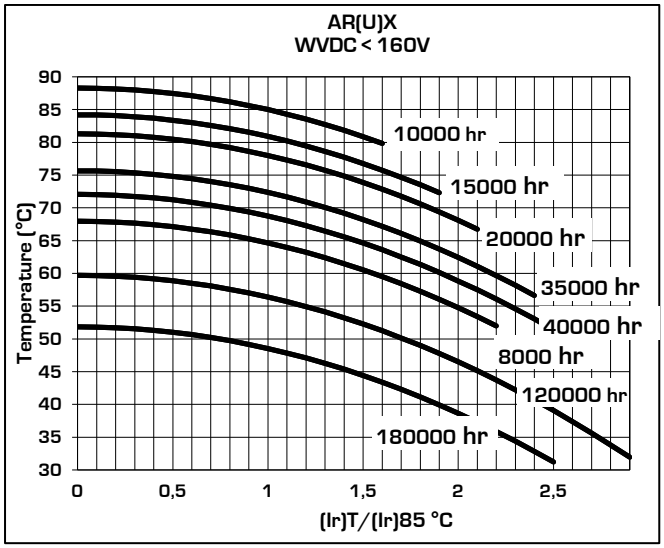

Table 3

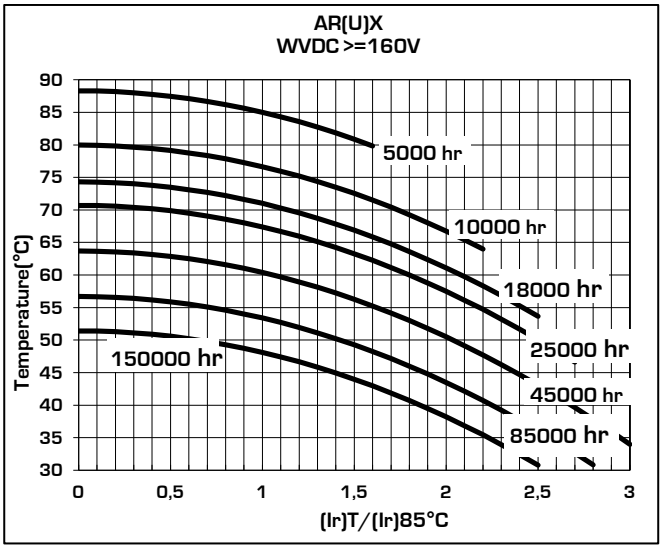

Table 4

Leakage Current

After the rated voltage has been applied to the capacitor for 5 minutes the leakage current must be within those limits.

Maximum limit	@25°C	If≤0,004xCxV
Operating limit	@25°C	If≤0,001xCxV

Where: If=leakage current [µA], C=capacitance [µF], V=rated voltage [V]

Surge Voltage

Working Voltage	40	50	63	75	100	160	200	250	350	400	420	450
Surge Voltage	46	58	73	86	115	185	230	290	385	440	460	495

	Capacitance	Case	Diam	Height	Tanδ	ESRmax | typ		Zmax	Iripple @100Hz		Ordering Code
	[µF]@100Hz		[mm]	[mm]	[%]@100Hz	[mΩ]@100Hz		[mΩ]@10KHz	[A]@55°C	[A]@85°C	(U) for mounting stud
40	15000	AB	35	83	0,35	33	27	25	10,5	6,1	AR(U)X153M40AB1
	22000	AC	35	105	0,42	27	22	18	13,2	7,7	AR(U)X223M40AC1
		BB	51	83	0,42	30	24	23	14,6	8,1	AR(U)X223M40BB1
	33000	BB	51	83	0,45	20	16	18	16,9	9,8	AR(U)X333M40BB1
	47000	BB	51	83	0,48	15	12	18	16,9	11,4	AR(U)X473M40BB1
		BC	51	105	0,51	16	12	14	21,4	13,3	AR(U)X473M40BC1
	68000	CC	63	107	0,63	15	12	11	26,3	14,6	AR(U)X683M40CC1
	100000	CC	63	107	0,70	10	8	9	30,0	17,5	AR(U)X104M40CC1
	150000	DC	76	107	0,90	9	7	8	36,1	21,1	AR(U)X154M40DC1
	220000	DF	76	147	1,30	8	7	7	41,6	24,3	AR(U)X224M40DF1
63	6800	AB	35	83	0,20	42	34	27	9,3	5,2	AR(U)X682M63AB1
	10000	AB	35	83	0,22	32	25	21	10,8	6,0	AR(U)X103M63AB1
	15000	AC	35	105	0,25	24	19	18	14,1	7,8	AR(U)X153M63AC1
	22000	BB	51	83	0,33	21	17	17	16,1	8,9	AR(U)X223M63BB1
		BC	51	105	0,33	24	19	18	18,2	10,1	AR(U)X223M63BC1
	33000	BC	51	105	0,38	17	13	14	20,8	11,6	AR(U)X333M63BC1
	47000	CC	63	105	0,33	10	8	9	30,0	16,7	AR(U)X473M63CC1
	68000	DC	76	107	0,39	8	7	7	36,9	20,5	AR(U)X683M63DC1
	100000	DF	76	147	0,45	6	5	6	47,7	26,5	AR(U)X104M63DF1
100	3300	AB	35	83	0,12	52	42	34	8,4	4,7	AR(U)X332M100AB1
	4700	AB	35	83	0,12	37	29	27	9,7	5,4	AR(U)X472M100AB1
		BB	51	83	0,12	41	33	30	12,6	7,0	AR(U)X472M100BB1
	6800	AC	35	105	0,12	25	20	20	13,2	7,3	AR(U)X682M100AC1
	10000	BB	51	83	0,12	17	14	17	15,6	8,7	AR(U)X103M100BB1
		BC	51	105	0,12	19	15	14	20,4	11,3	AR(U)X103M100BC1
	15000	BC	51	105	0,12	11	9	13	21,6	12	AR(U)X153M100BC1
	22000	CC	63	107	0,12	8	6	9	27,8	15,4	AR(U)X223M100CC1
	33000	DC	76	107	0,12	5	4	8	35,9	20	AR(U)X333M100DC1
	47000	DF	76	147	0,12	4	3	7	46,7	26	AR(U)X473M100DF1
160	1500	AB	35	83	0,12	115	92	62	6,2	3,4	AR(U)X152M160AB1
	2200	AC	35	105	0,12	78	63	41	8,5	4,7	AR(U)X222M160AC1
	3300	BB	51	83	0,12	52	42	29	11,3	6,3	AR(U)X332M160BB1
	4700	BC	51	105	0,12	37	29	25	14,0	7,8	AR(U)X472M160BC1
	6800	CC	63	105	0,12	25	20	20	18,9	10,5	AR(U)X682M160CC1
	10000	CC	63	105	0,12	17	14	18	20,5	11,4	AR(U)X103M160CC1
		DC	76	107	0,12	19	15	14	25,8	14,3	AR(U)X103M160DC1
	15000	DF	76	147	0,12	13	10	10	36,2	20,1	AR(U)X153M160DF1
	22000	DF	76	147	0,12	8	6	8	36,4	20,2	AR(U)X223M160DF1
200	680	AA	35	59	0,12	253	202	111	3,8	2,1	AR(U)X681M200AA1
	1000	AB	35	83	0,12	172	138	78	5,6	3,1	AR(U)X102M200AB1
	1500	AC	35	105	0,12	115	92	51	7,9	4,4	AR(U)X152M200AC1
	2200	BB	51	83	0,12	78	63	36	10,3	5,7	AR(U)X222M200BB1

	Capacitance	Case	Diam	Height	Tanδ	ESRmax | typ		Zmax	Iripple @100Hz		Ordering Code
	[µF]@100Hz		[mm]	[mm]	[%]@100Hz	[mΩ]@100Hz		[mΩ]@10KHz	[A]@55°C	[A]@85°C	(U) for mounting stud
200	2200	CC	63	107	0,12	65	57	30	11,6	6,0	AR(U)X222M200CC1
	3300	BC	51	105	0,12	52	42	30	12,8	7,1	AR(U)X332M200BC1
	4700	CC	63	107	0,12	37	29	21	17,2	9,6	AR(U)X472M200CC1
	6800	CC	63	107	0,12	24	20	17	22,5	11,2	AR(U)X682M200CC1
	10000	DC	76	107	0,12	17	14	14	25,5	14,2	AR(U)X103M200DC1
	15000	DF	76	147	0,12	11	9	12	32,0	17,8	AR(U)X153M200DF1
250	470	AA	35	59	0,12	366	293	155	3,2	1,8	AR(U)X471M250AA1
	680	AB	35	83	0,12	253	202	107	4,7	2,6	AR(U)X681M250AB1
	1000	AC	35	105	0,12	172	138	86	6,1	3,4	AR(U)X102M250AC1
	1500	BB	51	83	0,12	115	92	59	8,0	4,5	AR(U)X152M250BB1
	2200	BC	51	105	0,12	78	63	44	10,5	5,8	AR(U)X222M250BC1
		CC	63	107	0,12	69	58	55	10,9	6,3	AR(U)X222M250CC1
	3300	BC	51	105	0,12	52	42	30	12,8	7,1	AR(U)X332M250BC1
	4700	CC	63	107	0,12	37	29	23	17,2	9,6	AR(U)X472M250CC1
	6800	DC	76	107	0,12	25	20	20	21,1	11,7	AR(U)X682M250DC1
	10000	DF	76	147	0,12	17	14	17	26,1	14,5	AR(U)X103M250DF1
350	330	AA	35	59	0,12	521	417	217	2,7	1,5	AR(U)X331M350AA1
	470	AB	35	83	0,12	366	293	155	3,9	2,2	AR(U)X471M350AB1
	680	AC	35	105	0,12	253	202	107	5,3	2,9	AR(U)X681M350AC1
	1000	AC	35	105	0,12	172	138	78	6,4	3,6	AR(U)X102M350AC1
	1500	BB	51	83	0,12	115	92	51	8,6	4,8	AR(U)X152M350BB1
	2200	BC	51	105	0,12	78	63	35	11,7	6,5	AR(U)X222M350BC1
	3300	CC	63	107	0,12	52	42	25	16,1	9	AR(U)X332M350CC1
		DC	76	107	0,12	47	35	24	16,9	10	AR(U)X332M350DC1
	4700	DC	76	107	0,12	37	29	22	19,2	10,7	AR(U)X472M350DC1
		DF	76	147	0,12	33	27	20	20,3	11,9	AR(U)X472M350DC1
	6800	DF	76	147	0,12	25	20	18	26,4	14,6	AR(U)X682M350DF1
400	330	AA	35	59	0,12	521	417	221	2,7	1,5	AR(U)X331M400AA1
	470	AB	35	83	0,12	366	293	155	3,9	2,2	AR(U)X471M400AB1
	680	AC	35	105	0,12	253	202	111	5,3	2,9	AR(U)X681M400AC1
	1000	BB	51	83	0,12	172	138	78	7,0	3,9	AR(U)X102M400BB1
	1500	BB	51	83	0,12	115	92	78	8,0	4,5	AR(U)X152M400BB1
	1500	BC	51	105	0,12	115	92	50	9,7	5,4	AR(U)X152M400BC1
	2200	CC	51	107	0,12	78	63	40	12,4	6,9	AR(U)X222M400CC1
	3300	DC	76	107	0,12	52	42	29	16,5	9,2	AR(U)X332M400DC1
	4700	DF	76	147	0,12	37	29	21	22,5	12,5	AR(U)X472M400DF1
450	220	AA	35	59	0,12	782	625	480	1,8	1,0	AR(U)X221M450AA1
	330	AB	35	83	0,12	521	417	323	2,6	1,5	AR(U)X331M450AB1
	470	AC	35	105	0,12	366	293	237	4,6	2,5	AR(U)X471M450AC1
	680	BB	51	83	0,12	253	202	166	4,7	2,6	AR(U)X681M450BB1
	1000	BC	51	105	0,12	172	138	112	6,4	3,6	AR(U)X102M450BC1
	1500	BC	51	105	0,12	162	118	92	7,3	3,9	AR(U)X152M450BC1

	Capacitance	Case	Diam	Height	Tanδ	ESRmax | typ		Zmax	Iripple @100Hz		Ordering Code
	[µF]@100Hz		[mm]	[mm]	[%]@100Hz	[mΩ]@100Hz		[mΩ]@10KHz	[A]@55°C	[A]@85°C	(U) for mounting stud
450	1500	CC	63	107	0,12	115	92	75	8,9	4,9	AR(U)X152M450CC1
	2200	CC	63	107	0,12	78	63	56	12,0	6,7	AR(U)X222M450CC1
	2200	DC	76	107	0,12	68	54	46	13,2	7,3	AR(U)X222M450DC1
	2200	DF	76	147	0,12	60	47	39	14,0	7,9	AR(U)X222M450DF1
	3300	DF	76	107	0,12	52	39	32	16,0	8,9	AR(U)X332M450DC1
	4700	DF	76	147	0,12	37	29	28	20,0	11,1	AR(U)X472M450DF1

Dimension, Quantity and Weight for box

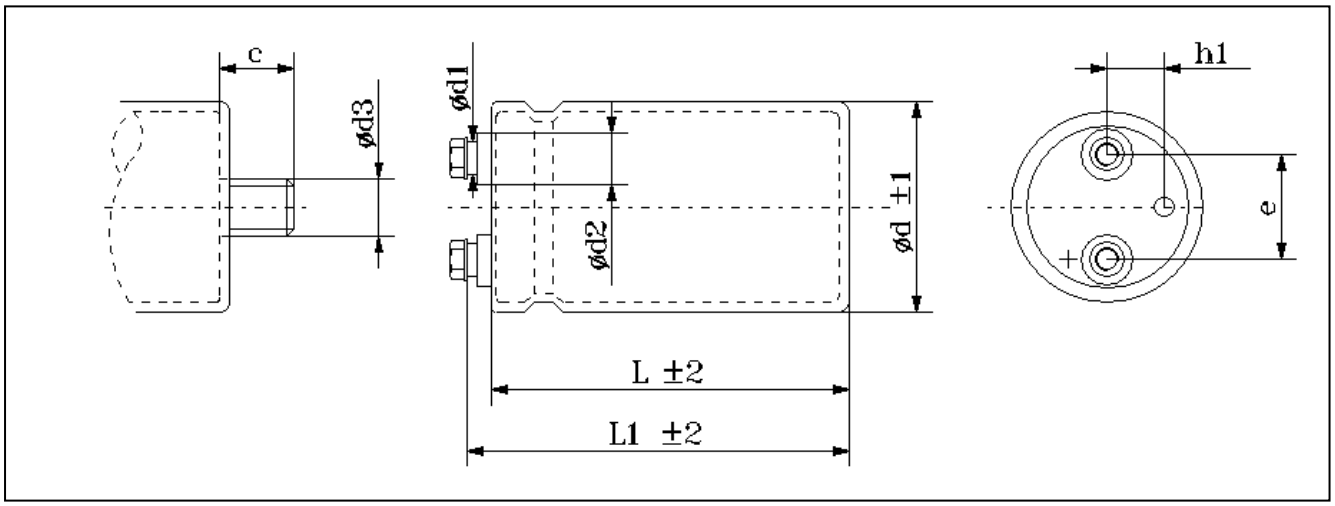

Case				Connections						Mounting Stud			Packaging	
Code	DxL	L1	h1	d1	d2	e	Screw			Screw			Pcs/Box	Weight/box
							Thread	Torque	Lenght	d3	c	Torque		
AA	35X59	64	8	8	12	12.7	M5	2.0	10	M8	12	10	100	4-7
AB	35X83	89	8	8	12	12.7	M5	2.0	10	M8	12	10	50	4-6
AC	35X105	109	8	8	12	12.7	M5	2.0	10	M8	12	10	50	6-8
BC	51x105	109	13	13	18	22.2	M5	2,0	10	M12	16	10	30	6-9
CC	63x107	111	16	13	18	28.6	M5	2,0	10	M12	16	10	20	6-8
DC	76x107	111	19	13	18	31.8	M5	2,0	10	M12	16	10	12	5-7
DF	76x147	151	19	13	18	31.8	M5	2,0	10	M12	16	10	12	6-14

All dimensions in mm, torque in Nm, weight in kg

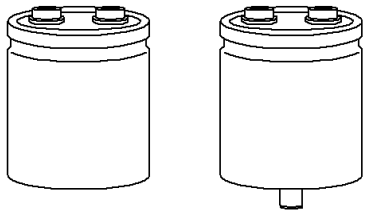

AY - AYU -

Series AY(U)- – 85°C 10000h

Capacitors screw terminal type

- AY - Flat Bottom
- AYU - Mounting Stud
- Capacitance Tolerance: -20 + 20% – standard (M)
- Capacitance Tolerance: -10 + 30% - on request (X)
- Self extinguishing construction and electrolyte
- Climatic category: 25/85/56
- Case: 51x105 – 90x222
- Temperature – 25°C + 85°C
- All welded construction reliable electrical contact

Mechanical Outlines

- Case: aluminium made
- Terminals: screw
- Sealing: hermetic by EPR gasket, on a resin cover
- Pressure Release Vent: silicone-rubber
- Sleeve: self-extinguishing thermo shrinkable
- Size: see enclosed drawings
- Mounting Hardware: see hardware section
- External Material UL94-V0

Ordering Code: Example

AY(U)X-HR | 472 | M | 400 | DF | 1

Itelcond Capacitor Series
AY-flat bottom
AYU-mounting stud
Capacitance: [μF] significant digit plus multiplying factor:
1=x10, 2=x100, 3=x1.000, 4=x10.

1= Sleeve – 0 = not Sleeve
Case Size Code see tables
Voltage – DC rated [V]
Tolerance range:
M=(±20%) X=(-10+30%)

Ripple Current

The allowable values of ripple current in Ampères, are related to the temperature and frequency by following equation:

$$I_{Ripple} = K_t \bullet K_f \bullet I_{Ripple@85°C}$$

Where:

- IRipple@85°C is the limit given by tables, @ 85°C/100HZ
- Kt is the Temperature Correlation Factor
- Kf is the Frequency Correlation Factor

Note .Superimposed alternating voltage summed to DC volage must not exceed rated voltage, rated ripple current must not be exceeded and no reverse polarity is allowed

°C	40	55	65	75	85
Kt	1.65	1.50	1.40	1.20	1.00

Table 1-Kt Values

	Kf			
Vn/Hz	50<V=300	V>300	50<V=300	V>300
	Diameter Code A,B		Diameter Code C,D,E	
50	0.79	0.76	0.78	0.72
100	1.00	1.00	1.00	1.00
120	1.04	1.04	1.02	1.03
200	1.12	1.17	1.06	1.14
300	1.16	1.28	1.08	1.24
400	1.20	1.35	1.09	1.29
500	1.22	1.39	1.09	1.32
>1000	1.25	1.45	1.09	1.37

Table 2-Kf Values

Expected Lifetime End of Life Criteria

During useful life typical electrical parameters of electrolytic capacitor are subject to change.
End of Life criteria, when rated temperature, voltage and ripple are applied, are:

$\Delta C / C_{t0} \leq 30\%$ *Equation 1*

$ESR \leq 3 \bullet ESR_{t0}$ *Equation 2*

$I_f \leq I_{ft0}$ *Equation 3*

where t_0 is the initial value

Voltage Endurance Test Requirements

On Voltage Endurance Test are based Expected Lifetime Curves.
End of Life criteria, when rated temperature, and voltage are applied for 2'000hrs, are

$\Delta C / C_{t0} \leq 15\%$ *Equation 4*

$ESR \leq 1{,}3 \bullet ESR_{t0}$ *Equation 5*

$I_f \leq I_{ft0}$ *Equation 6*

where t_0 is the initial value

Expected Lifetime Vs Temperature and Ripple Current

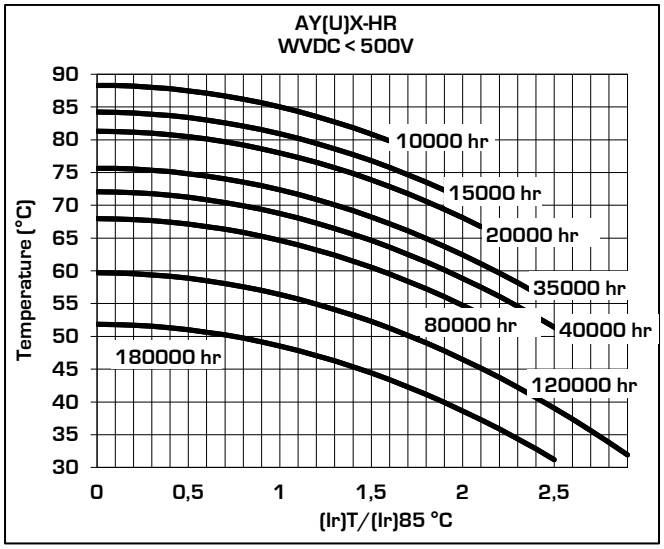

Table 3

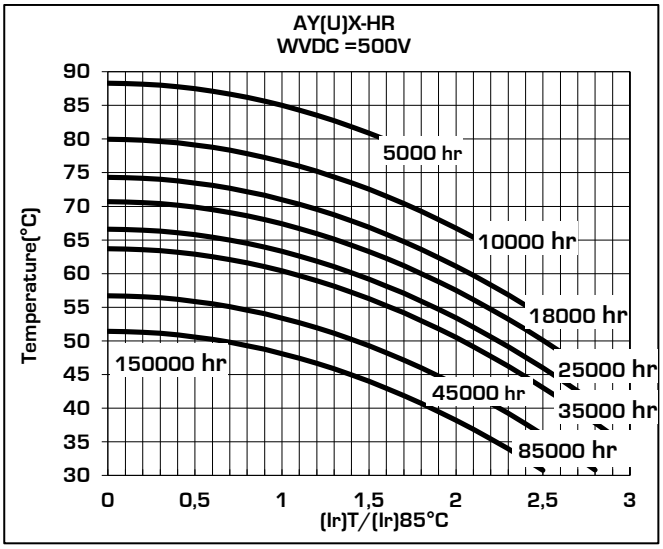

Table 4

Leakage Current

After the rated voltage has been applied to the capacitor for 5 minutes the leakage current must be within those limits.

Maximum limit	@25°C	If≤0,004xCxV
Operating limit	@25°C	If≤0,001xCxV

Where: If=leakage current [µA], C=capacitance [µF], V=rated voltage [V]

Surge Voltage

Working Voltage	63	75	100	160	200	250	350	400	420	450	500
Surge Voltage	73	86	115	185	230	290	385	440	460	495	525

	Capacitance	Case	Diam	Height	Tanδ	ESRmax | typ		Zmax	Iripple @100Hz		Ordering Code
	[µF]@100Hz		[mm]	[mm]	[%]@100Hz	[mΩ]@100Hz		[mΩ]@10KHz	[A]@55°C	[A]@85°C	(U) for mounting stud
63	22000	BB	51	83	0,26	19	15	14	17,1	12,2	AY(U)X-HR223M063BB1
		BC	51	105	0,24	17	14	13	19,7	14,1	AY(U)X-HR223M063BC1
	33000	BC	51	105	0,28	14	11	10	22,3	15,9	AY(U)X-HR333M063BC1
		CC	63	107	0,27	13	10	10	25,8	18,4	AY(U)X-HR333M063CC1
	47000	CC	63	107	0,30	10	8	8	29,2	20,9	AY(U)X-HR473M063CC1
	68000	DC	76	105	0,36	8	7	6	35,4	25,3	AY(U)X-HR683M063DC1
	100000	DF	76	147	0,40	6	5	5	47,1	33,7	AY(U)X-HR103M063DF1
100	10000	BB	51	83	0,12	19	15	14	16,9	12,1	AY(U)X-HR103M100BB1
		BC	51	105	0,1	16	13	12	20,6	14,7	AY(U)X-HR103M100BC1
	15000	BC	51	105	0,11	12	9	9	24,0	17,1	AY(U)X-HR153M100BC1
	22000	CC	63	107	0,15	11	9	8	28,3	20,2	AY(U)X-HR223M100CC1
		DC	76	107	0,14	10	8	8	32,5	23,2	AY(U)X-HR223M100DC1
	33000	DC	76	107	0,18	9	7	7	35,2	25,1	AY(U)X-HR333M100DC1
		DF	76	147	0,16	8	6	6	42,8	30,6	AY(U)X-HR333M100DF1
	47000	DF	76	147	0,18	6	5	5	48,1	34,4	AY(U)X-HR473M100DF1
160	4700	BC	51	105	0,1	34	27	25	14,1	10,1	AY(U)X-HR472M160BC1
		CC	63	107	0,09	30	24	23	16,9	12,0	AY(U)X-HR472M160CC1
	6800	DC	76	107	0,1	23	19	18	21,4	15,3	AY(U)X-HR682M160DC1
	10000	DC	76	107	0,11	18	14	13	24,8	17,7	AY(U)X-HR103M160DC1
	15000	DF	76	147	0,12	13	10	10	33,3	23,8	AY(U)X-HR153M160DF1
	22000	DF	76	147	0,15	11	9	8	36,1	25,8	AY(U)X-HR223M160DF1
		EF	90	220	0,14	10	8	8	49,1	35,1	AY(U)X-HR223M160EF1
200	3300	BC	51	105	0,10	48	39	36	11,8	8,4	AY(U)X-HR332M200BC1
	4700	CC	63	107	0,10	34	27	25	16,0	11,4	AY(U)X-HR472M200CC1
		DC	76	107	0,09	30	24	23	18,8	13,4	AY(U)X-HR472M200DC1
	6800	DC	76	107	0,10	23	19	18	21,4	15,3	AY(U)X-HR682M200DC1
	10000	DF	76	147	0,11	18	14	13	28,4	20,3	AY(U)X-HR103M200DF1
	15000	DF	76	147	0,12	13	10	10	33,3	23,8	AY(U)X-HR153M200DF1
	22000	DF	76	147	0,12	9	7	7	40,3	28,8	AY(U)X-HR223M200DF1
		DK	76	167	0,12	9	7	7	42,7	30,5	AY(U)X-HR223M200DK1
	33000	DK	76	167	0,12	6	5	4	52,3	37,4	AY(U)X-HR333M200DK1
250	2200	BB	51	83	0,09	65	52	49	9,2	6,5	AY(U)X-HR222M250BB1
		BC	51	105	0,08	58	46	43	10,8	7,7	AY(U)X-HR222M250BC1
	3300	BC	51	105	0,10	48	39	36	11,8	8,4	AY(U)X-HR332M250BC1
		CC	63	107	0,09	43	35	33	14,1	10,1	AY(U)X-HR332M250CC1
	4700	DC	76	107	0,10	34	27	25	17,8	12,7	AY(U)X-HR472M250DC1
	6800	DC	76	107	0,10	23	19	18	21,4	15,3	AY(U)X-HR682M250DC1
	10000	DF	76	147	0,10	16	13	12	29,8	21,3	AY(U)X-HR103M250DF1
		EC	90	107	0,10	16	13	12	28,6	20,5	AY(U)X-HR103M250EC1
	15000	DF	76	147	0,10	11	8	8	36,5	26,1	AY(U)X-HR153M250DF1

	Capacitance	Case	Diam	Height	Tanδ	ESRmax | typ		Zmax	Iripple @100Hz		Ordering Code
	[µF]@100Hz		[mm]	[mm]	[%]@100Hz	[mΩ]@100Hz		[mΩ]@10KHz	[A]@55°C	[A]@85°C	(U) for mounting stud
350	2200	BC	51	105	0,09	65	52	49	10,2	7,3	AY(U)X-HR222M350BC1
	3300	CC	63	107	0,09	43	35	33	14,1	10,1	AY(U)X-HR332M350CC1
		DC	76	107	0,08	39	31	29	16,7	11,9	AY(U)X-HR332M350DC1
	4700	DC	76	107	0,09	30	24	23	18,8	13,4	AY(U)X-HR472M350DC1
		DF	76	147	0,08	27	22	20	22,8	16,3	AY(U)X-HR472M350DF1
	6800	DF	76	147	0,08	19	15	14	27,5	19,6	AY(U)X-HR682M350DF1
		DJ	76	222	0,09	21	17	16	31,2	22,3	AY(U)X-HR682M350DJ1
		EC	90	107	0,11	26	21	19	22,5	16,1	AY(U)X-HR682M350EC1
	10000	DF	76	147	0,11	18	14	13	28,4	20,3	AY(U)X-HR103M350DF1
		DJ	76	222	0,10	16	13	12	35,9	25,6	AY(U)X-HR103M350DJ1
		EC	90	107	0,10	16	13	12	28,6	20,5	AY(U)X-HR103M350EC1
	15000	DF	76	147	0,10	11	8	8	36,5	26,1	AY(U)X-HR153M350DF1
		DJ	76	222	0,10	11	8	8	44,0	31,4	AY(U)X-HR153M350DJ1
		EF	90	147	0,12	13	10	10	36,6	26,2	AY(U)X-HR153M350EF1
		EJ	90	222	0,12	13	10	10	44,0	31,4	AY(U)X-HR153M350EJ1
	18000	EF	90	147	0,12	11	8	8	40,1	28,7	AY(U)X-HR183M350EF1
	22000	EJ	90	222	0,12	9	7	7	53,3	38,1	AY(U)X-HR223M350EJ1
	27000	EJ	90	222	0,12	7	6	5	59,0	42,2	AY(U)X-HR273M350EJ1
400	1500	BB	51	83	0,10	106	85	80	7,2	5,1	AY(U)X-HR152M400BB1
		BC	51	105	0,10	106	85	80	8,0	5,7	AY(U)X-HR152M400BC1
	2200	BC	51	105	0,10	72	58	54	9,6	6,9	AY(U)X-HR222M400BC1
		CC	63	107	0,09	65	52	49	11,5	8,2	AY(U)X-HR222M400CC1
		DC	76	107	0,08	58	46	43	13,6	9,7	AY(U)X-HR222M400DC1
	3300	CC	63	107	0,09	43	35	33	14,1	10,1	AY(U)X-HR332M400CC1
		DC	76	107	0,09	43	35	33	15,7	11,2	AY(U)X-HR332M400DC1
		DF	76	147	0,09	43	35	33	18,0	12,9	AY(U)X-HR332M400DF1
	4700	DC	76	107	0,10	34	27	25	17,8	12,7	AY(U)X-HR472M400DC1
		DF	76	147	0,09	30	24	23	21,5	15,4	AY(U)X-HR472M400DF1
	6800	DF	76	147	0,08	19	15	14	27,5	19,6	AY(U)X-HR682M400DF1
	10000	DJ	76	222	0,11	18	14	13	34,2	24,5	AY(U)X-HR103M400DJ1
		EF	90	147	0,11	18	14	13	31,2	22,3	AY(U)X-HR103M400EF1
	15000	EJ	90	222	0,08	8	7	6	53,9	38,5	AY(U)X-HR153M400EJ1
	18000	EJ	90	222	0,08	7	6	5	59,0	42,2	AY(U)X-HR183M400EJ1
450	1000	BB	51	83	0,12	191	153	143	5,4	3,8	AY(U)X-HR102M450BB1
	1500	BB	51	83	0,11	117	93	88	6,8	4,9	AY(U)X-HR152M450BB1
		BC	51	105	0,10	106	85	80	8,0	5,7	AY(U)X-HR152M450BC1
	2200	CC	63	107	0,12	87	69	65	10,0	7,1	AY(U)X-HR222M450CC1
		DC	76	107	0,11	80	64	60	11,6	8,3	AY(U)X-HR222M450DC1
	3300	DC	76	107	0,12	58	46	43	13,6	9,7	AY(U)X-HR332M450DC1
		DF	76	147	0,1	48	39	36	17,1	12,2	AY(U)X-HR332M450DF1
	4700	DF	76	147	0,12	41	33	30	18,6	13,3	AY(U)X-HR472M450DF1
		EC	90	107	0,11	37	30	28	18,7	13,4	AY(U)X-HR472M450EC1

	Capacitance	Case	Diam	Height	Tanδ	ESRmax | typ		Zmax	Iripple @100Hz		Ordering Code
	[µF]@100Hz		[mm]	[mm]	[%]@100Hz	[mΩ]@100Hz		[mΩ]@10KHz	[A]@55°C	[A]@85°C	(U) for mounting stud
450	6800	DF	76	147	0,13	30	24	23	21,6	15,4	AY(U)X-HR682M450DF1
		DJ	76	222	0,12	28	22	21	27,0	19,3	AY(U)X-HR682M450DJ1
	10000	DJ	76	222	0,12	19	15	14	32,8	23,4	AY(U)X-HR103M450DJ1
		EJ	90	222	0,12	19	15	14	35,9	25,7	AY(U)X-HR103M450EJ1
	15000	EJ	90	222	0,13	14	11	10	42,3	30,2	AY(U)X-HR153M450EJ1
500	1000	BC	51	106	0,13	207	166	155	5,7	4,1	AY(U)X-HR102M500BC1
	1500	DC	76	107	0,13	138	110	104	8,8	6,3	AY(U)X-HR152M500DC1
	2200	CC	63	107	0,13	94	75	71	9,6	6,9	AY(U)X-HR222M500CC1
		DC	76	107	0,13	94	75	71	10,7	7,6	AY(U)X-HR222M500DC1
		DF	76	147	0,13	94	75	71	12,3	8,8	AY(U)X-HR222M500DF1
	3300	DF	76	147	0,12	58	46	43	15,6	11,2	AY(U)X-HR332M500DF1
	3900	DF	76	147	0,12	49	39	37	17,0	12,1	AY(U)X-HR392M500DF1
	4400	DF	76	147	0,12	43	35	33	18,0	12,9	AY(U)X-HR442M500DF1
	4700	DF	76	147	0,12	41	33	30	18,6	13,3	AY(U)X-HR472M500DF1
	5600	DF	76	147	0,12	34	27	26	20,4	14,5	AY(U)X-HR562M500DF1
	6800	DJ	76	220	0,12	28	22	21	26,9	19,2	AY(U)X-HR682M500DJ1
	10000	EJ	90	220	0,12	19	15	14	35,8	25,6	AY(U)X-HR103M500EJ1

Dimension, Quantity and Weight for box

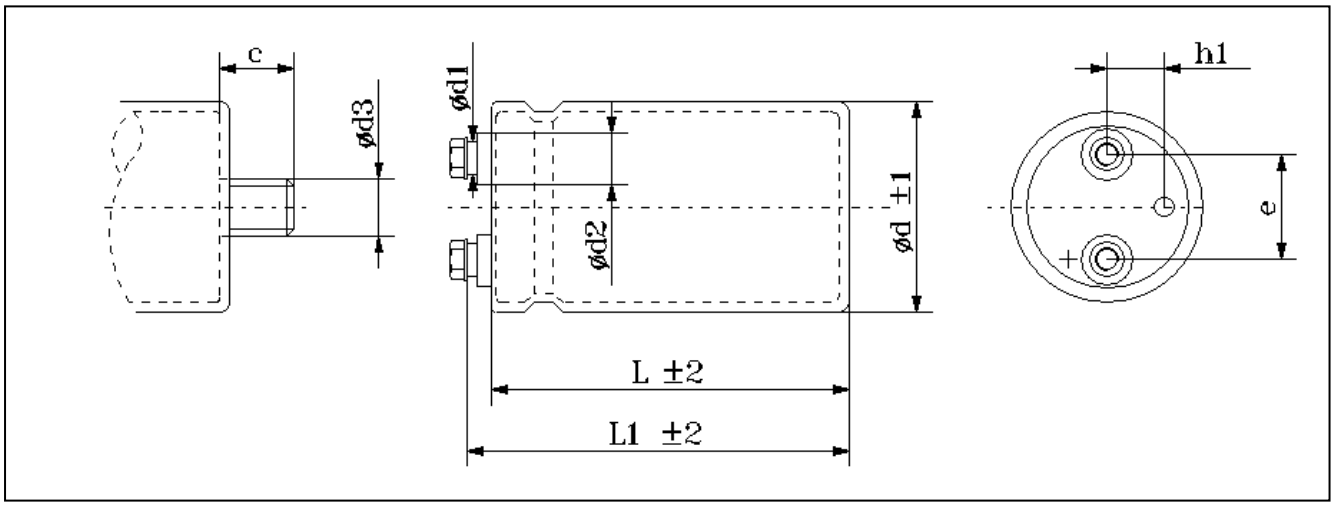

Case				Connections							Mounting Stud			Packaging	
Code	DxL	L1	h1	d1	d2	e	Terminal	Screw			Screw			Pcs/Box	Weight/box
							Code	Thread	Torque	Lenght	d3	c	Torque		
BC	51x105	109	13	13	18	22.2	X	M5	2,0	10	M12	16	10Nm	30	6-9
CC	63x107	111	16	13	18	28.6	X	M5	2,0	10	M12	16	10Nm	20	6-8
DC	76x107	111	19	13	18	31.8	X	M5	2,0	10	M12	16	10Nm	12	5-7
DF	76x147	151	19	13	18	31.8	X	M5	2,0	10	M12	16	10Nm	12	6-14
				17	23		G	M6	2,5						
DK	76x167	173	19	13	18	31.8	X	M5	2,0	10	M12	16	10Nm	12	6-14
				17	23		G	M6	2,5						
DJ	76x220	222	19	13	18	31.8	X	M5	2,0	10	M12	16	10Nm	8	9-11
				17	23		G	M6	2,5						
EC	90x107	112	19	17	23	31,8	G	M6	2,5	10	M12	16	10Nm	6	7-9
EF	90x147	153	19	17	23	31,8	G	M6	2,5	10	M12	16	10Nm	6	9-11
EJ	90x220	227	19	17	23	31,8	G	M6	2,5	10	M12	16	10Nm	6	8-12

All dimensions in mm, torque in Nm, weight in kg

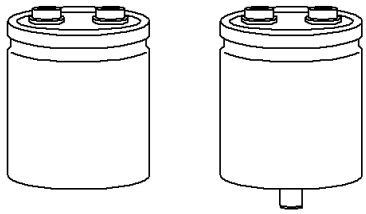

AP - AP(U)-

Series AP(U)- - 85°C 12000h

Capacitors screw terminal type

- AP - Flat Bottom
- APU - Mounting Stud
- Capacitance Tolerance: -20 + 20% – standard (M)
- Capacitance Tolerance: -10 + 30% - on request (X)
- Self extinguishing construction and electrolyte
- Climatic category: 25/85/56
- Case: 63x107 – 90x222
- Temperature – 25°C + 85°C
- All welded construction reliable electrical contact

Mechanical Outlines

- Case: aluminium made
- Terminals: screw
- Sealing: hermetic by EPR gasket, on a resin cover
- Pressure Release Vent: silicone-rubber
- Sleeve: self-extinguishing thermo shrinkable
- Size: see enclosed drawings
- Mounting Hardware: see hardware section
- External Material UL94-V0

Ordering Code: Example

AP(U)X	472	M	400	DF	1

Itelcond Capacitor Series
AP-flat bottom
APU-mounting stud
Capacitance: [µF] significant digit plus multiplying factor:
1=x10, 2=x100, 3=x1.000, 4=x10.

1= Sleeve – 0 = not Sleeve
Case Size Code see tables
Voltage – DC rated [V]
Tolerance range:
M=(±20%) X=(-10+30%)

Ripple Current

The allowable values of ripple current in Ampères, are related to the temperature and frequency by following equation:

$$I_{Ripple} = K_t \bullet K_f \bullet I_{Ripple@85°C}$$

Where:

- IRipple@85°C is the limit given by tables, @ 85°C/100HZ
- Kt is the Temperature Correlation Factor
- Kf is the Frequency Correlation Factor

Note .Superimposed alternating voltage summed to DC volage must not exceed rated voltage, rated ripple current must not be exceeded and no reverse polarity is allowed

°C	40	55	65	75	85
Kt	1.65	1.50	1.40	1.20	1.00

Table 1-Kt Values

	Kf
Vn/Hz	V>300
	Diameter Code C, D, E
50	0.72
100	1.00
120	1.03
200	1.14
300	1.24
400	1.29
500	1.32
>1000	1.37

Table 2-Kf Values

Expected Lifetime End of Life Criteria

During useful life typical electrical parameters of electrolytic capacitor are subject to change.
End of Life criteria, when rated temperature, voltage and ripple are applied, are:

$\Delta C / C_{t0} \leq 30\%$ *Equation 1*

$ESR \leq 3 \bullet ESR_{t0}$ *Equation 2*

$I_f \leq I_{ft0}$ *Equation 3*

where t_0 is the initial value

Voltage Endurance Test Requirements

On Voltage Endurance Test are based Expected Lifetime Curves.
End of Life criteria, when rated temperature, and voltage are applied for 2'000hrs, are

$\Delta C / C_{t0} \leq 10\%$ *Equation 4*

$ESR \leq 1{,}3 \bullet ESR_{t0}$ *Equation 5*

$I_f \leq I_{ft0}$ *Equation 6*

where t_0 is the initial value

Expected Lifetime Vs Temperature and Ripple Current

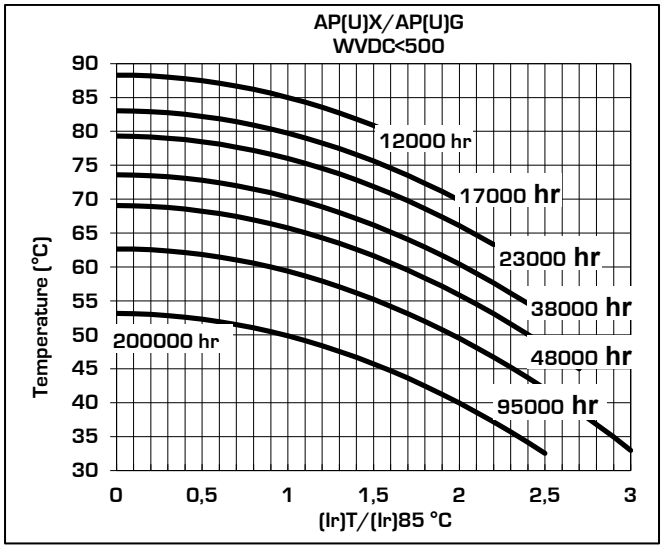

Table 3

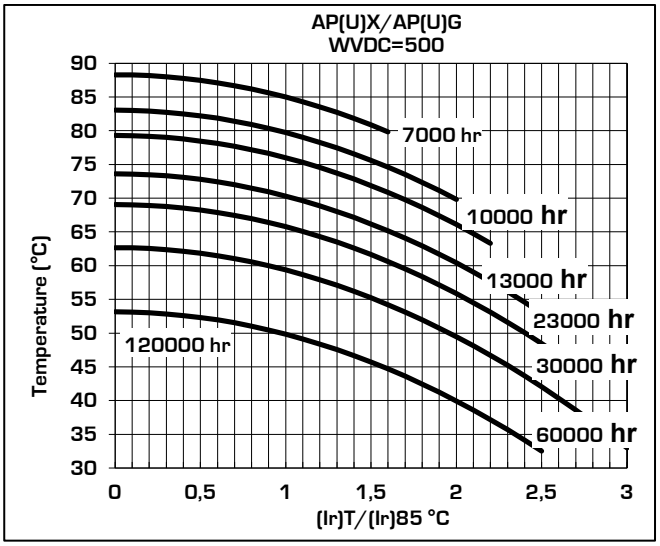

Table 4

Leakage Current

After the rated voltage has been applied to the capacitor for 5 minutes the leakage current must be within those limits.

Maximum limit	@25°C	If≤0,001xCxV
Operating limit	@25°C	If≤0,0005xCxV

Where: If=leakage current [µA], C=capacitance [µF], V=rated voltage [V]

Surge Voltage

Working Voltage	350	400	450	500
Surge Voltage	385	440	495	550

	Capacitance	Case	Diam	Height	Tanδ	ESRmax | typ		Zmax	Iripple @100Hz		Ordering Code
	[µF]@100Hz		[mm]	[mm]	[%]@100Hz	[mΩ]@100Hz		[mΩ]@10KHz	[A]@55°C	[A]@85°C	(U) for mounting stud
350	2200	CC	63	107	0,09	65	52	49	12,4	8,2	AP(U)X222M350CC1
	3300	DF	76	147	0,09	43	35	33	19,3	12,9	AP(U)X332M350DF1
	4700	DF	76	147	0,09	30	24	23	23,1	15,4	AP(U)X472M350DF1
	6800	DF	76	147	0,10	23	19	18	26,3	17,6	AP(U)X682M350DF1
		DJ	76	222	0,10	23	19	18	31,7	21,1	AP(U)X682M350DJ1
	10000	DJ	76	222	0,10	16	13	12	38,5	25,6	AP(U)X103M350DJ1
		EF	90	147	0,10	16	13	12	35,1	23,4	AP(U)X103M350EF1
	15000	EJ	90	222	0,10	11	8	8	51,6	34,4	AP(U)X153M350EJ1
400	1500	DC	76	107	0,10	106	85	80	10,8	7,2	AP(U)X152M400DC1
	2200	DC	76	107	0,11	80	64	60	12,4	8,3	AP(U)X222M400DC1
	3300	DC	76	107	0,12	58	46	43	14,6	9,7	AP(U)X332M400DC1
		DF	76	147	0,12	58	46	43	16,7	11,2	AP(U)X332M400DF1
	4700	DF	76	147	0,12	41	33	30	20,0	13,3	AP(U)X472M400DF1
	6800	DF	76	147	0,12	28	22	21	24,0	16,0	AP(U)X682M400DF1
		DJ	76	222	0,12	28	22	21	29,0	19,3	AP(U)X682M400DJ1
	8200	DJ	76	222	0,12	23	19	17	31,8	21,2	AP(U)X822X400DJ1
	10000	DJ	76	222	0,12	19	15	14	35,1	23,4	AP(U)X103M400DJ1
		EF	90	147	0,12	19	15	14	32,0	21,4	AP(U)X103M400EF1
	15000	EJ	90	222	0,12	13	10	10	47,1	31,4	AP(U)X153M400EJ1
450	1500	CC	63	107	0,10	106	85	80	9,7	6,5	AP(U)X152M450CC1
	2200	CC	63	107	0,12	87	69	65	10,7	7,1	AP(U)X222M450CC1
	3300	DC	76	107	0,12	58	46	43	14,6	9,7	AP(U)X332M450DC1
		DF	76	147	0,10	48	39	36	18,3	12,2	AP(U)X332M450DF1
	4700	DF	76	147	0,12	41	33	30	20,0	13,3	AP(U)X472M450DF1
		EF	90	147	0,12	41	33	30	22,0	14,6	AP(U)X472X450EF1
		DJ	76	222	0,12	41	33	30	24,1	16,0	AP(U)X472X450DJ1
	6800	EF	90	147	0,12	28	22	21	26,4	17,6	AP(U)X682M450EF1
		DJ	76	222	0,12	28	22	21	29,0	19,3	AP(U)X682M450DJ1
	8200	DJ	76	222	0,12	23	19	17	31,8	21,2	AP(U)X822X450DJ1
	10000	EJ	90	222	0,11	18	14	13	40,2	26,8	AP(U)X103M450EJ1
500	1500	DC	76	107	0,13	138	110	104	9,4	6,3	AP(U)X152M500DC1
	2200	DC	76	107	0,13	94	75	71	11,4	7,6	AP(U)X222M500DC1
		DF	76	147	0,13	94	75	71	13,1	8,8	AP(U)X222X500DF1
	3300	DC	76	107	0,13	63	50	47	14,0	9,3	AP(U)X332M500DC1
		DF	76	147	0,13	63	50	47	16,1	10,7	AP(U)X332M500DF1
	3900	DF	76	147	0,13	53	42	40	17,5	11,7	AP(U)X392X500DF1
	4400	DF	76	147	0,13	47	38	35	18,6	12,4	AP(U)X442X500DF1
	4700	DF	76	147	0,13	44	35	33	19,2	12,8	AP(U)X472M500DF1
	5600	DJ	76	222	0,13	37	30	28	25,2	16,8	AP(U)X562X500DJ1
	6800	EF	90	147	0,13	30	24	23	25,4	16,9	AP(U)X682M500EF1
		DJ	76	222	0,13	30	24	23	27,8	18,5	AP(U)X682M500DJ1
	10000	EJ	90	222	0,13	21	17	16	37,0	24,7	AP(U)X103M500EJ1

Dimension, Quantity and Weight for box

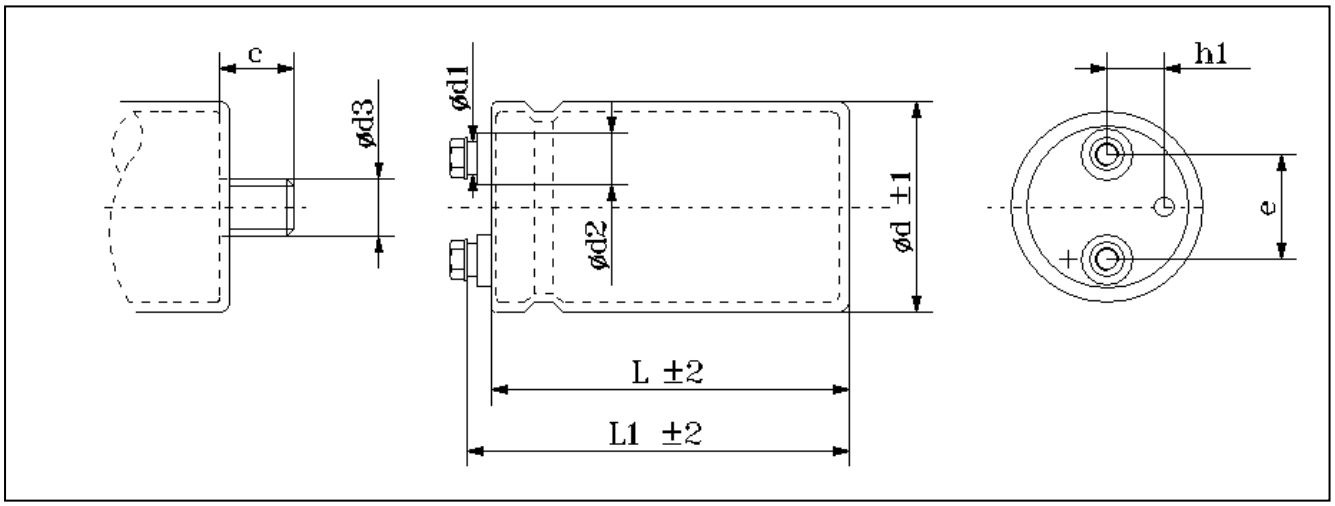

Case				Connections							Mounting Stud			Packaging	
Code	DxL	L1	h1	d1	d2	e	Terminal	Screw			Screw			Pcs/Box	Weight/box
							Code	Thread	Torque	Lenght	d3	c	Torque		
BC	51x105	109	13	13	18	22.2	X	M5	2,0	10	M12	16	10Nm	30	6-9
CC	63x107	111	16	13	18	28.6	X	M5	2,0	10	M12	16	10Nm	20	6-8
DC	76x107	111	19	13	18	31.8	X	M5	2,0	10	M12	16	10Nm	12	5-7
DF	76x147	151	19	13	18	31.8	X	M5	2,0	10	M12	16	10Nm	12	6-14
				17	23		G	M6	2,5						
DK	76x167	173	19	13	18	31.8	X	M5	2,0	10	M12	16	10Nm	12	6-14
				17	23		G	M6	2,5						
DJ	76x220	222	19	13	18	31.8	X	M5	2,0	10	M12	16	10Nm	8	9-11
				17	23		G	M6	2,5						
EC	90x107	112	19	17	23	31,8	G	M6	2,5	10	M12	16	10Nm	6	7-9
EF	90x147	153	19	17	23	31,8	G	M6	2,5	10	M12	16	10Nm	6	9-11
EJ	90x220	227	19	17	23	31,8	G	M6	2,5	10	M12	16	10Nm	6	8-12

All dimensions in mm, torque in Nm, weight in kg

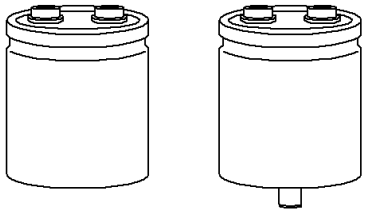

AS - ASU -

Series AS(U)– 85°C 15000h

Capacitors screw terminal type

- AS - Flat Bottom
- ASU - Mounting Stud
- Capacitance Tolerance: -20 + 20% – standard (M)
- Capacitance Tolerance: -10 + 30% - on request (X)
- Self extinguishing construction and electrolyte
- Climatic category: 40/85/56
- Case: 51x105 – 90x222
- Temperature – 40°C + 85°C
- All welded construction reliable electrical contact

Mechanical Outlines

- Case: aluminium made
- Terminals: screw
- Sealing: hermetic by EPR gasket, on a resin cover
- Pressure Release Vent: silicone-rubber
- Sleeve: self-extinguishing thermo shrinkable
- Size: see enclosed drawings
- Mounting Hardware: see hardware section
- External Material UL94-V0

Ordering Code: Example

AS(U)M | 472 | M | 400 | DF | 1

Itelcond Capacitor Series
AS-flat bottom
ASU-mounting stud
Capacitance: [µF] significant digit plus multiplying factor:
1=x10, 2=x100, 3=x1.000, 4=x10.

1= Sleeve – 0 = not Sleeve
Case Size Code see tables]
Voltage – DC rated [V]
Tolerance range:
M=(±20%) X=(-10+30%)

Ripple Current

The allowable values of ripple current in Ampères, are related to the temperature and frequency by following equation:

$$I_{Ripple} = K_t \bullet K_f \bullet I_{Ripple@85°C}$$

Where:

- IRipple@85°C is the limit given by tables, @ 85°C/100HZ
- Kt is the Temperature Correlation Factor
- Kf is the Frequency Correlation Factor

Note .Superimposed alternating voltage summed to DC volage must not exceed rated voltage, rated ripple current must not be exceeded and no reverse polarity is allowed

°C	40	55	65	75	85
Kt	2.10	1.80	1.60	1.30	1.00

Table 1-Kt Values

	Kf			
Vn/Hz	50<V=300	V>300	50<V=300	V>300
	Diameter Code A,B		Diameter Code C,D,E	
50	0.79	0.76	0.78	0.72
100	1.00	1.00	1.00	1.00
120	1.04	1.04	1.02	1.03
200	1.12	1.17	1.06	1.14
300	1.16	1.28	1.08	1.24
400	1.20	1.35	1.09	1.29
500	1.22	1.39	1.09	1.32
>1000	1.25	1.45	1.09	1.37

Table 2-Kf Values

Expected Lifetime End of Life Criteria

During useful life typical electrical parameters of electrolytic capacitor are subject to change.
End of Life criteria, when rated temperature, voltage and ripple are applied, are:

$\Delta C / C_{t0} \leq 30\%$ *Equation 1*

$ESR \leq 3 \bullet ESR_{t0}$ *Equation 2*

$I_f \leq I_{f t0}$ *Equation 3*

where t_0 is the initial value

Voltage Endurance Test Requirements

Voltage Endurance Test are one of the basys for Expected Lifetime Curves.
End of Life criteria, when rated temperature, and voltage are applied for 2'000hrs, are

$\Delta C / C_{t0} \leq 10\%$ *Equation 4*

$ESR \leq 1{,}3 \bullet ESR_{t0}$ *Equation 5*

$I_f \leq I_{f t0}$ *Equation 6*

where t_0 is the initial value

Expected Lifetime Vs Temperature and Ripple Current

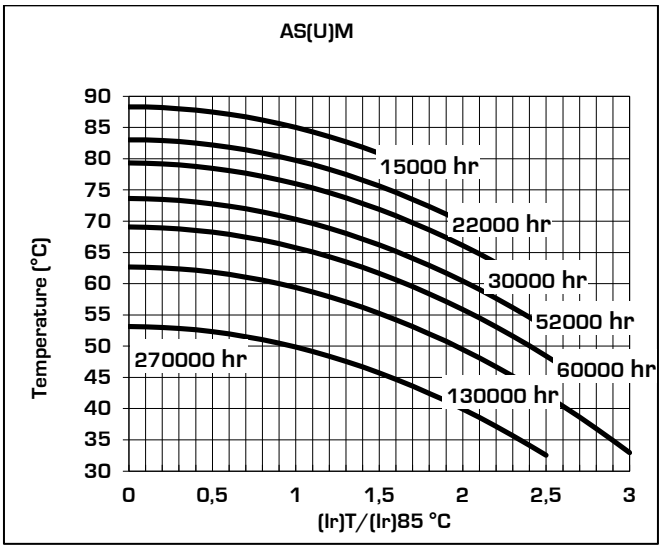

Table 3

Leakage Current

After the rated voltage has been applied to the capacitor for 5 minutes the leakage current must be within those limits.

Maximum limit	@25°C	$If \leq 1..5 \bullet \sqrt{C \bullet V}$
Operating limit	@25°C	$If \leq 1..5 \bullet \sqrt{C \bullet V}$

Where: If=leakage current [µA], C=capacitance [µF], V=rated voltage [V]

Surge Voltage

Working Voltage	100	160	200	250	350	400	450	500
Surge Voltage	130	215	250	300	425	475	525	550

	Capacitance	Case	Diam	Height	Tanδ	ESRmax | typ		Zmax	Iripple @100Hz		Ordering Code
	[µF]@100Hz		[mm]	[mm]	[%]@100Hz	[mΩ]@100Hz		[mΩ]@10KHz	[A]@55°C	[A]@85°C	(U) for mounting stud
100	4700	BC	51	105	0,12	41	33	29	17,0	9,5	AS(U)M472M100BC1
	6800	BC	51	105	0,12	28	22	21	21,0	11,4	AS(U)M682M100BC1
	10000	CC	63	107	0,12	19	15	14	28,0	15,6	AS(U)M103M100CC1
	15000	DC	76	107	0,13	14	11	11	37,0	20,4	AS(U)M153M100DC1
	22000	DF	76	147	0,13	9	8	9	51,0	28,3	AS(U)M223M100DF1
	33000	DF	76	147	0,13	6	5	5	61,0	33,9	AS(U)M333M100DF1
160	2200	BC	51	105	0,10	72	58	50	13,0	7,1	AS(U)M222M160BC1
	3300	CC	63	107	0,10	48	39	34	18,0	9,8	AS(U)M332M160CC1
	4700	DC	76	107	0,12	41	33	31	21,0	11,9	AS(U)M472M160DC1
	6800	DF	76	147	0,12	28	22	21	29,0	16,4	AS(U)M682M160DF1
	10000	DF	76	147	0,12	19	15	14	36,0	19,9	AS(U)M103M160DF1
	15000	DF	76	147	0,12	13	10	12	40,5	22,4	AS(U)M153M160DF1
200	1500	BC	51	105	0,08	85	68	59	12,0	6,6	AS(U)M152M200BC1
	2200	CC	63	107	0,08	58	46	41	16,0	9,0	AS(U)M222M200CC1
	3300	CC	63	107	0,09	43	35	32	19,0	10,4	AS(U)M332M200CC1
	4700	DC	76	107	0,10	34	27	25	23,0	13,1	AS(U)M472M200DC1
	10000	DF	76	147	0,11	18	14	13	36,5	20,3	AS(U)M103M200DF1
250	1500	BC	51	105	0,08	85	68	64	11,4	6,4	AS(U)M152M250BC1
	2200	CC	63	107	0,09	65	52	49	14,8	8,2	AS(U)M222M250CC1
	3300	DC	76	107	0,10	48	39	36	19,2	10,7	AS(U)M332M250DC1
	4700	DF	76	147	0,10	34	27	25	26,3	14,6	AS(U)M472M250DF1
	6800	DF	76	147	0,10	23	19	18	31,6	17,6	AS(U)M682M250DF1
	10000	DJ	76	222	0,10	16	13	12	46,2	25,6	AS(U)M103M250DJ1
	15000	DJ	76	222	0,10	11	8	8	56,5	31,4	AS(U)M153X250DJ1
350	680	BC	51	105	0,07	164	131	124	8,0	4,4	AS(U)M681M350BC1
	1000	BC	51	105	0,07	108	87	85	10,0	5,4	AS(U)M102M350BC1
	1500	CC	63	107	0,08	81	65	66	13,0	7,0	AS(U)M152M350CC1
	2200	DC	76	107	0,09	62	50	51	16,0	8,9	AS(U)M222M350DC1
	3300	DF	76	147	0,09	41	33	35	22,0	12,5	AS(U)M332M350DF1
	4700	DF	76	147	0,07	24	19	24	27,0	14,9	AS(U)M472M350DF1
	6800	DJ	76	222	0,10	23	19	20	39,0	21,7	AS(U)M682M350DJ1
400	680	BC	51	105	0,10	234	187	151	7,0	4,0	AS(U)M681M400BC1
	1000	CC	63	107	0,10	159	127	105	10,0	5,4	AS(U)M102M400CC1
	1500	DC	76	107	0,10	106	85	72	13,0	7,4	AS(U)M152M400DC1
	2200	DC	76	107	0,11	80	64	51	15,0	8,5	AS(U)M222M400DC1
	2200	DF	76	147	0,10	72	58	51	18,0	10,2	AS(U)M222M400DF1
	3300	DF	76	147	0,12	58	46	35	21,0	11,4	AS(U)M332M400DF1
	4700	DF	76	147	0,12	41	33	35	24,8	13,5	AS(U)M472M400DF1
	6800	DJ	76	222	0,12	28	22	26	30,0	16,4	AS(U)M682M400DJ1
450	1500	CC	63	107	0,10	106	80	60	9,5	6,8	AS(U)M152M450CC1
	2200	CC	63	107	0,12	87	65	49	10,5	7,5	AS(U)M222M450CC1
	3300	DC	76	107	0,12	58	43	36	14,3	10,2	AS(U)M332M450DC1

Itelcond

	Capacitance	Case	Diam	Height	Tanδ	ESRmax | typ		Zmax	Iripple @100Hz		Ordering Code
	[µF]@100Hz		[mm]	[mm]	[%]@100Hz	[mΩ]@100Hz		[mΩ]@10KHz	[A]@55°C	[A]@85°C	(U) for mounting stud
450	3300	DF	76	147	0,10	48	36	28	17,9	12,8	AS(U)M332M450DF1
	4700	DF	76	147	0,12	41	30	24	19,5	13,9	AS(U)M472M450DF1
		EC	90	107	0,12	41	30	25	21,8	15,6	AS(U)M472M450EC1
	5600	DF	76	147	0,12	34	27	29	30,0	16,4	AS(U)M562M450DF1
		DJ	76	222	0,13	37	30	28	31,0	17,2	AS(U)M562M450DJ1
	6800	DJ	76	222	0,12	28	21	17	28,3	20,2	AS(U)M682M450DJ1
		EF	90	147	0,12	28	21	17	26,2	18,7	AS(U)M682M450EF1
	10000	DJ	76	222	0,12	19	14	20	32,5	22,8	AS(U)M103M450DJ1
		EJ	90	222	0,12	19	14	12	37,7	26,9	AS(U)M103M450EJ1
500	470	BB	51	83	0,10	339	271	254	5,2	2,9	AS(U)M471M450BB1
		BC	51	106	0,10	339	271	254	5,8	3,2	AS(U)M471M450BC1
	1000	BC	51	105	0,10	159	127	98	8,0	4,2	AS(U)M102M500BC1
	1500	DC	76	107	0,10	106	85	74	11,0	6,0	AS(U)M152M500DC1
	2200	DC	76	107	0,10	72	58	54	13,4	7,6	AS(U)M222M500DC1
		DF	76	147	0,10	72	58	47	15,0	8,3	AS(U)M222M500DF1
	3300	DF	76	147	0,10	48	39	27	16,0	9,1	AS(U)M332M500DF1
	3900	DF	76	147	0,10	41	32	22	18,3	11,2	AS(U)M392M500DF1
	4400	DF	76	147	0,10	35	28	2	23,7	13,5	AS(U)M442M500DF1
	4700	DF	76	147	0,08	27	22	18	27,0	15,4	AS(U)M472M500DF1
		EF	90	147	0,08	27	22	18	30,1	17,2	AS(U)M472M500EF1
	5600	EF	90	147	0,12	34	27	26	34,1	18,9	AS(U)M562M450EF1
	6800	EF	90	147	0,12	28	22	21	37,5	20,8	AS(U)M682M450EF1
	10000	EJ	90	220	0,12	19	15	14	54,4	30,2	AS(U)M103M450EJ1

Dimension, Quantity and Weight for box

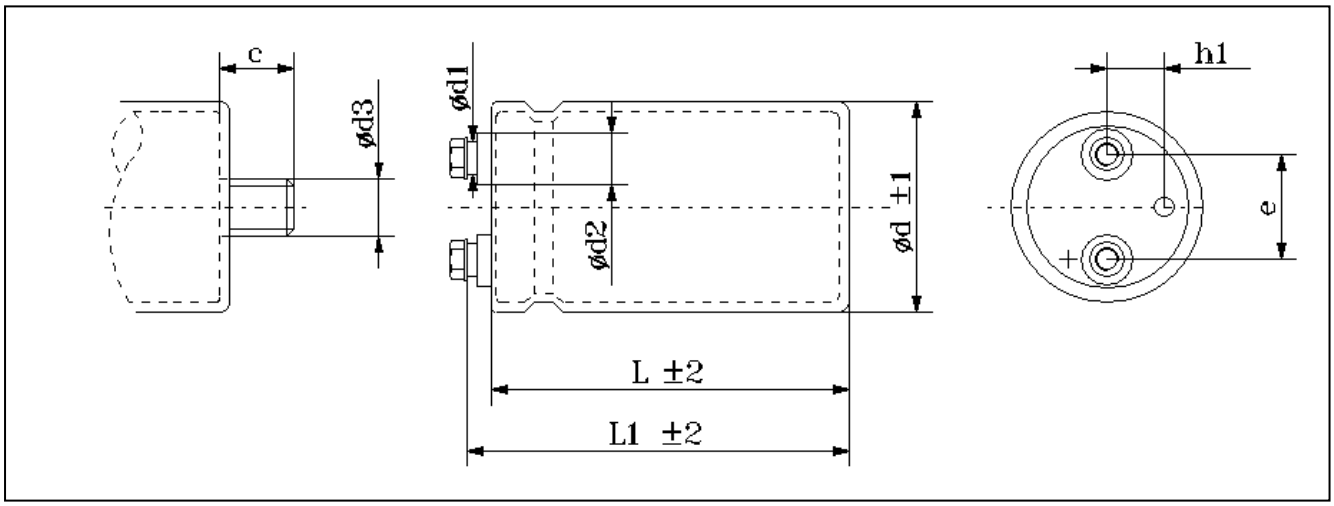

Case				Connections							Mounting Stud			Packaging	
Code	DxL	L1	h1	d1	d2	e	Terminal	Screw			Screw			Pcs/Box	Weight/box
							Code	Thread	Torque	Lenght	d3	c	Torque		
BC	51x105	109	13	13	18	22.2	M	M5	2,0	10	M12	16	10Nm	30	6-9
CC	63x107	111	16	13	18	28.6	M	M5	2,0	10	M12	16	10Nm	20	6-8
DC	76x107	111	19	13	18	31.8	M	M5	2,0	10	M12	16	10Nm	12	5-7
DF	76x147	151	19	13	18	31.8	M	M5	2,0	10	M12	16	10Nm	12	6-14
				17	23		G	M6	2,5						
DK	76x167	173	19	13	18	31.8	M	M5	2,0	10	M12	16	10Nm	12	6-14
				17	23		G	M6	2,5						
DJ	76x220	222	19	13	18	31.8	M	M5	2,0	10	M12	16	10Nm	8	9-11
				17	23		G	M6	2,5						
EC	90x107	112	19	17	23	31,8	G	M6	2,5	10	M12	16	10Nm	6	7-9
EF	90x147	153	19	17	23	31,8	G	M6	2,5	10	M12	16	10Nm	6	9-11
EJ	90x220	227	19	17	23	31,8	G	M6	2,5	10	M12	16	10Nm	6	8-12

All dimensions in mm, torque in Nm, weight in kg

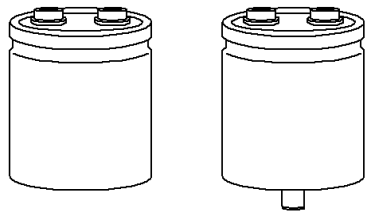

AF - AFU -

Series AF(U)- - 85°C 20000h

Capacitors screw terminal type

- AF - Flat Bottom
- AFU - Mounting Stud
- Capacitance Tolerance: -20 + 20% – standard (M)
- Capacitance Tolerance: -10 + 30% - on request (X)
- Self extinguishing construction and electrolyte
- Climatic category: 25/85/56
- Case: 63x107 – 90x222
- Temperature – 25°C + 85°C
- All welded construction reliable electrical contact

Mechanical Outlines

- Case: aluminium made
- Terminals: screw
- Sealing: hermetic by EPR gasket, on a resin cover
- Pressure Release Vent: silicone-rubber
- Sleeve: self-extinguishing thermo shrinkable
- Size: see enclosed drawings
- Mounting Hardware: see hardware section
- External Material UL94-V0

Ordering Code: Example

AF(U)X	472	M	400	DF	1

Itelcond Capacitor Series
AF-flat bottom
AFU-mounting stud
Capacitance: [µF] significant digit plus multiplying factor:
1=x10, 2=x100, 3=x1.000, 4=x10.

1= Sleeve – 0 = not Sleeve
Case Size Code see tables
Voltage – DC rated [V]
Tolerance range:
M=(±20%) X=(-10+30%)

Ripple Current

The allowable values of ripple current in Ampères, are related to the temperature and frequency by following equation:

$$I_{Ripple} = K_t \bullet K_f \bullet I_{Ripple@85°C}$$

Where:

- IRipple@85°C is the limit given by tables, @ 85°C/100HZ
- Kt is the Temperature Correlation Factor
- Kf is the Frequency Correlation Factor

Note .Superimposed alternating voltage summed to DC volage must not exceed rated voltage, rated ripple current must not be exceeded and no reverse polarity is allowed

°C	40	55	65	75	85
Kt	1.65	1.50	1.40	1.20	1.00

Table 1-Kt Values

	Kf
Vn/Hz	V>300
	Diameter Code C, D, E
50	0.72
100	1.00
120	1.03
200	1.14
300	1.24
400	1.29
500	1.32
>1000	1.37

Table 2-Kf Values

Expected Lifetime End of Life Criteria

During useful life typical electrical parameters of electrolytic capacitor are subject to change.
End of Life criteria, when rated temperature, voltage and ripple are applied, are:

$\Delta C / C_{t0} \leq 30\%$ *Equation 1*

$ESR \leq 3 \bullet ESR_{t0}$ *Equation 2*

$I_f \leq I_{f t0}$ *Equation 3*

where t_0 is the initial value

Voltage Endurance Test Requirements

Voltage Endurance Test are one of the basys for Expected Lifetime Curves.
End of Life criteria, when rated temperature, and voltage are applied for 2'000hrs, are

$\Delta C / C_{t0} \leq 10\%$ *Equation 4*

$ESR \leq 1{,}3 \bullet ESR_{t0}$ *Equation 5*

$I_f \leq I_{f t0}$ *Equation 6*

where t_0 is the initial value

Expected Lifetime Vs Temperature and Ripple Current

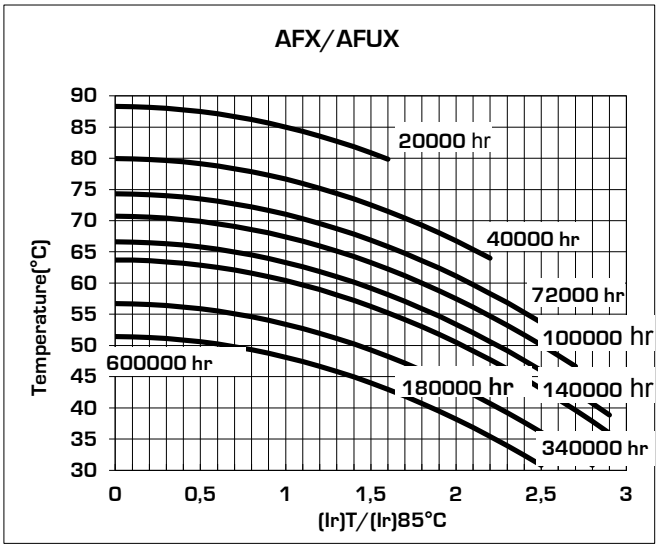

Table 3

Leakage Current

After the rated voltage has been applied to the capacitor for 5 minutes the leakage current must be within those limits.

Maximum limit	@25°C	If≤0,001xCxV
Operating limit	@25°C	If≤0,0005xCxV

Where: If=leakage current [µA], C=capacitance [µF], V=rated voltage [V]

Surge Voltage

Working Voltage	350	400	450
Surge Voltage	440	495	525

	Capacitance	Case	Diam	Height	Tanδ	ESRmax | typ		Zmax	Iripple @100Hz		Ordering Code
	[µF]@100Hz		[mm]	[mm]	[%]@100Hz	[mΩ]@100Hz		[mΩ]@10KHz	[A]@55°C	[A]@85°C	(U) for mounting stud
350	2200	CC	63	107	0,08	58	46	43	13,1	8,7	AF(U)X222M350CC1
	3300	DF	76	147	0,08	39	31	29	20,5	13,7	AF(U)X332M350DF1
	4700	DF	76	147	0,08	27	22	20	24,5	16,3	AF(U)X472M350DF1
	6800	DF	76	147	0,08	19	15	14	29,4	19,6	AF(U)X682M350DF1
		DJ	76	222	0,08	19	15	14	35,5	23,6	AF(U)X682M350DJ1
	10000	DJ	76	222	0,08	13	10	10	43,0	28,7	AF(U)X103M350DJ1
		EF	90	147	0,08	13	10	10	39,3	26,2	AF(U)X103M350EF1
	15000	EJ	90	222	0,08	8	7	6	57,7	38,5	AF(U)X153M350EJ1
400	1500	DC	76	107	0,08	85	68	64	12,0	8,0	AF(U)X152M400DC1
	2200	DC	76	107	0,08	58	46	43	14,6	9,7	AF(U)X222M400DC1
	3300	DC	76	107	0,08	39	31	29	17,9	11,9	AF(U)X332M400DC1
		DF	76	147	0,08	39	31	29	20,5	13,7	AF(U)X332M400DF1
	4700	DF	76	147	0,08	27	22	20	24,5	16,3	AF(U)X472M400DF1
	6800	DF	76	147	0,08	19	15	14	29,4	19,6	AF(U)X682M400DF1
		DJ	76	222	0,08	19	15	14	35,5	23,6	AF(U)X682M400DJ1
	10000	DJ	76	222	0,08	13	10	10	43,0	28,7	AF(U)X103M400DJ1
		EF	90	147	0,08	13	10	10	39,3	26,2	AF(U)X103M400EF1
	15000	EJ	90	222	0,08	8	7	6	57,7	38,5	AF(U)X153M400EJ1
450	1500	CC	63	107	0,08	85	68	64	10,8	7,2	AF(U)X152M450CC1
	2200	CC	63	107	0,08	58	46	43	13,1	8,7	AF(U)X222M450CC1
	3300	DC	76	107	0,08	39	31	29	17,9	11,9	AF(U)X332M450DC1
		DF	76	147	0,08	39	31	29	20,5	13,7	AF(U)X332M450DF1
	4700	DF	76	147	0,08	27	22	20	24,5	16,3	AF(U)X472M450DF1
	5600	DF	76	147	0,08	23	18	17	26,7	17,8	AF(U)X562X450DF1
	6800	EF	90	147	0,08	19	15	14	32,4	21,6	AF(U)X682M450EF1
		DJ	76	222	0,08	19	15	14	35,5	23,6	AF(U)X682M450DJ1
	10000	EJ	90	222	0,08	13	10	10	47,1	31,4	AF(U)X103M450EJ1

We have a **30% custom design in over 2,000 of our projects, please contact our Technical Office directly with your special requirements.**

Dimension, Quantity and Weight for box

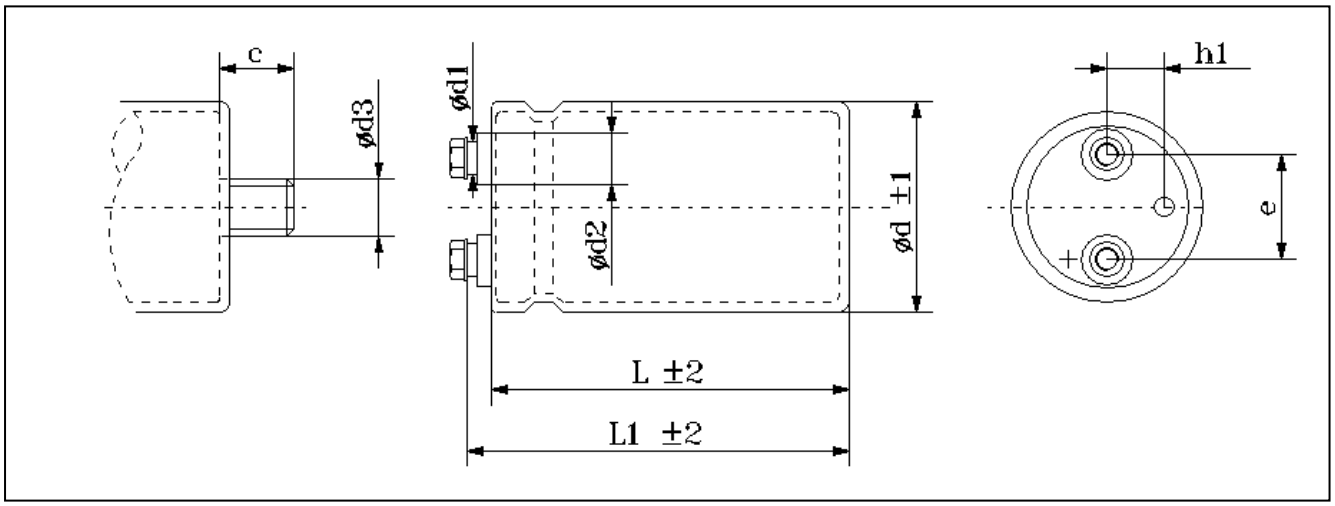

Case				Connections							Mounting Stud			Packaging	
Code	DxL	L1	h1	d1	d2	e	Terminal	Screw			Screw			Pcs/Box	Weight/box
							Code	Thread	Torque	Lenght	d3	c	Torque		
BC	51x105	109	13	13	18	22.2	X	M5	2,0	10	M12	16	10Nm	30	6-9
CC	63x107	111	16	13	18	28.6	X	M5	2,0	10	M12	16	10Nm	20	6-8
DC	76x107	111	19	13	18	31.8	X	M5	2,0	10	M12	16	10Nm	12	5-7
DF	76x147	151	19	13	18	31.8	X	M5	2,0	10	M12	16	10Nm	12	6-14
				17	23		G	M6	2,5						
DK	76x167	173	19	13	18	31.8	X	M5	2,0	10	M12	16	10Nm	12	6-14
				17	23		G	M6	2,5						
DJ	76x220	222	19	13	18	31.8	X	M5	2,0	10	M12	16	10Nm	8	9-11
				17	23		G	M6	2,5						
EC	90x107	112	19	17	23	31,8	G	M6	2,5	10	M12	16	10Nm	6	7-9
EF	90x147	153	19	17	23	31,8	G	M6	2,5	10	M12	16	10Nm	6	9-11
EJ	90x220	227	19	17	23	31,8	G	M6	2,5	10	M12	16	10Nm	6	8-12

All dimensions in mm, torque in Nm, weight in kg

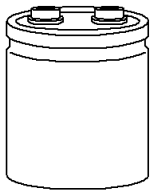

AZ-

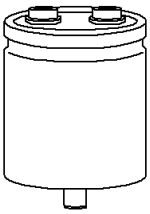

AZU-

Itelcond

Series AZ(U)- – 105°C 3000h

Capacitors screw terminal type

- AZX Flat Bottom
- AZUX Mounting Stud
- Capacitance Tolerance: -20 + 20% – standard (M)
- Capacitance Tolerance: -10 + 30% - on request (X)
- Climatic category: 25/105/86
- Case: 51x105 – 90x222
- Temperature – 40°C + 105°C
- All welded construction reliable electrical contact

Mechanical Outlines

- Case: aluminium made
- Terminals: screw
- Sealing: hermetic by EPR gasket, on a resin cover
- Pressure Release Vent: silicone-rubber
- Sleeve: self-extinguishing thermo shrinkable
- Size: see enclosed drawings
- Mounting Hardware: see hardware section
- External Material UL94-V0

Ordering Code: Example

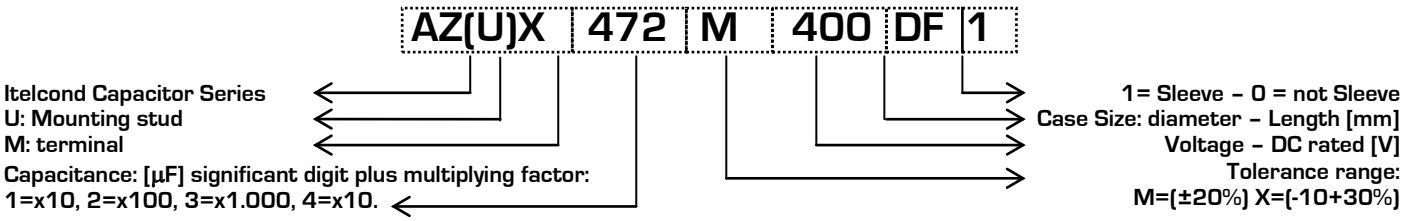

Ripple Current

The allowable values of ripple current in Ampères, are related to the temperature and frequency by following equation:

$$I_{Ripple} = K_t \bullet K_f \bullet I_{Ripple@105°C}$$

Where:

- IRipple@105°C is the limit given by tables, @ 105°C/100HZ
- Kt is the Temperature Correlation Factor
- Kf is the Frequency Correlation Factor

Note .Superimposed alternating voltage summed to DC volage must not exceed rated voltage, rated ripple current must not be exceeded and no reverse polarity is allowed

°C	40	55	65	75	85	95	105
Kt	2.50	2.40	2.20	2.00	1.80	1.30	1.00

Table 1-Kt Values

Hz	Kf
50	0.78
100	1.00
120	1.02
200	1.06
300	1.08
400	1.09
500	1.32
>1000	1.37

Table 2-Kf Values

Expected Lifetime End of Life Criteria

During useful life typical electrical parameters of electrolytic capacitor are subject to change.
End of Life criteria, when rated temperature, voltage and ripple are applied, are:

$\Delta C / C_{t0} \leq 30\%$ *Equation 1*

$ESR \leq 3 \bullet ESR_{t0}$ *Equation 2*

$I_f \leq I_{f t0}$ *Equation 3*

where t_0 is the initial value

Voltage Endurance Test Requirements

On Voltage Endurance Test are based Expected Lifetime Curves.
End of Life criteria, when rated temperature, and voltage are applied for 2'000hrs, are

$\Delta C / C_{t0} \leq 20\%$ *Equation 4*

$ESR \leq 1{,}3 \bullet ESR_{t0}$ *Equation 5*

$I_f \leq I_{f t0}$ *Equation 6*

where t_0 is the initial value

Expected Lifetime Vs Temperature and Ripple Current

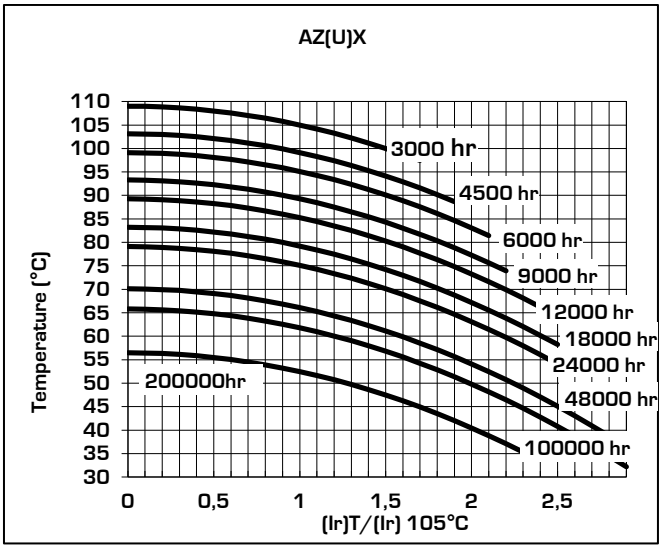

Table 3

Leakage Current

After the rated voltage has been applied to the capacitor for 5 minutes the leakage current must be within those limits.

Maximum limit	@25°C	$If \leq 1.5 \bullet \sqrt{C \bullet V}$
Operating limit	@25°C	$If \leq 1.5 \bullet \sqrt{C \bullet V}$

Where: If=leakage current [µA], C=capacitance [µF], V=rated voltage [V]

Surge Voltage

Working Voltage	200	250	350	400	450
Surge Voltage	230	290	385	440	495

	Capacitance	Case	Diam	Height	Tanδ	ESRmax | typ		Zmax	Iripple @100Hz		Ordering Code
	[µF]@100Hz		[mm]	[mm]	[%]@100Hz	[mΩ]@100Hz		[mΩ]@10KHz	[A]@55°C	[A]@85°C	(U) for mounting stud
200	2200	BC	51	105	0,09	65	49	61	10,0	5,4	AZ(U)X222M200BC1
	3300	CC	63	105	0,09	43	33	40	13,0	7,5	AZ(U)X332M200CC1
	4700	DC	76	107	0,09	30	23	28	18,0	10,0	AZ(U)X472M200DC1
	6800	DF	76	147	0,09	21	16	18	25,0	13,7	AZ(U)X682M200DF1
	10000	DF	76	147	0,09	14	11	13	30,0	16,6	AZ(U)X103M200DF1
250	2200	BC	51	105	0,09	65	52	49	10,8	6,0	AZ(U)X222M250BC1
	3300	BC	51	105	0,09	43	35	33	13,2	7,3	AZ(U)X332M250BC1
		CC	63	107	0,09	43	35	33	15,0	8,3	AZ(U)X332M250CC1
	4700	DC	76	107	0,09	30	24	23	19,9	11,0	AZ(U)X472M250DC1
		DF	76	147	0,09	30	24	23	22,8	12,7	AZ(U)X472M250DF1
	6800	DF	76	147	0,09	21	17	16	27,4	15,2	AZ(U)X682M250DF1
	10000	DF	76	147	0,09	14	11	11	33,3	18,5	AZ(U)X103M250DF1
		DJ	76	222	0,09	14	11	11	40,1	22,3	AZ(U)X103M250DJ1
	15000	DJ	76	222	0,09	10	8	7	49,1	27,3	AZ(U)X153M250DJ1
		EF	90	147	0,09	10	8	7	44,8	24,9	AZ(U)X153M250EF1
	22000	EJ	90	222	0,09	7	5	5	65,2	36,2	AZ(U)X223M250EJ1
350	1500	BC	51	105	0,07	74	59	56	10,1	5,6	AZ(U)X152M350BC1
	2200	CC	63	107	0,07	51	41	38	13,9	7,7	AZ(U)X222M350CC1
	3300	CC	63	107	0,07	34	27	25	17,0	9,4	AZ(U)X332M350CC1
		DC	76	107	0,07	34	27	25	18,9	10,5	AZ(U)X332M350DC1
	3900	DC	76	107	0,07	29	23	21	20,5	11,4	AZ(U)X392M350DC1
	4700	DC	76	107	0,07	24	19	18	22,5	12,5	AZ(U)X472M350DC1
		DF	76	147	0,07	24	19	18	25,9	14,4	AZ(U)X472M350DF1
	5600	DF	76	147	0,07	20	16	15	28,2	15,7	AZ(U)X562M350DF1
	6800	DF	76	147	0,07	16	13	12	31,1	17,3	AZ(U)X682M350DF1
		DJ	76	222	0,07	16	13	12	37,5	20,8	AZ(U)X682M350DJ1
	8200	DF	76	147	0,07	0	0	0	0,0	0,0	AZ(U)X822M350DF1
	10000	DJ	76	222	0,07	11	9	8	45,4	25,2	AZ(U)X103M350DJ1
		EF	90	147	0,07	11	9	8	41,5	23,0	AZ(U)X103M350EF1
	15000	EJ	90	222	0,07	7	6	6	61,0	33,9	AZ(U)X153M350EJ1
400	680	BC	51	105	0,07	164	131	123	6,8	3,8	AZ(U)X682M400BC1
	1000	BC	51	105	0,07	111	89	84	8,2	4,6	AZ(U)X102M400BC1
	1500	BC	51	105	0,07	74	59	56	10,1	5,6	AZ(U)X152M400BC1
	2200	CC	63	107	0,07	51	41	38	13,9	7,7	AZ(U)X222M400CC1
		DC	76	107	0,07	51	41	38	15,4	8,6	AZ(U)X222M400DC1
	3300	DC	76	107	0,07	34	27	25	18,9	10,5	AZ(U)X332M400DC1
		DF	76	147	0,07	34	27	25	21,7	12,0	AZ(U)X332M400DF1
	3900	DF	76	147	0,07	29	23	21	23,6	13,1	AZ(U)X392M400DF1
	4700	DF	76	147	0,07	24	19	18	25,9	14,4	AZ(U)X472M400DF1
	5600	DF	76	147	0,07	20	16	15	28,2	15,7	AZ(U)X562M400DF1
	6800	DF	76	147	0,07	16	13	12	31,1	17,3	AZ(U)X682M400DF1
		DJ	76	222	0,07	16	13	12	37,5	20,8	AZ(U)X682M400DJ1

	Capacitance	Case	Diam	Height	Tanδ	ESRmax | typ		Zmax	Iripple @100Hz		Ordering Code
	[µF]@100Hz		[mm]	[mm]	[%]@100Hz	[mΩ]@100Hz		[mΩ]@10KHz	[A]@55°C	[A]@85°C	(U) for mounting stud
400	10000	EF	90	147	0,07	11	9	8	41,5	23,0	AZ(U)X103M400EF1
		DJ	76	222	0,07	11	9	8	45,4	25,2	AZ(U)X103M400DJ1
	15000	EJ	90	222	0,07	7	6	6	61,0	33,9	AZ(U)X153M400EJ1
450	1000	BC	51	105	0,08	127	102	96	7,7	4,3	AZ(U)X102M450BC1
	1500	CC	63	107	0,08	85	68	64	10,7	5,9	AZ(U)X152M450CC1
	2200	DC	76	107	0,08	58	46	43	14,4	8,0	AZ(U)X222M450DC1
		DF	76	147	0,08	58	46	43	16,5	9,2	AZ(U)X222M450DF1
	3300	DF	76	147	0,08	39	31	29	20,3	11,3	AZ(U)X332M450DF1
	3900	DF	76	147	0,08	33	26	24	22,0	12,2	AZ(U)X392M450DF1
	4700	DF	76	147	0,08	27	22	20	24,2	13,4	AZ(U)X472M450DF1
	5600	DF	76	147	0,08	23	18	17	26,4	14,7	AZ(U)X562M450DF1
	6800	DJ	76	222	0,08	19	15	14	35,1	19,5	AZ(U)X682M450DJ1
		EF	90	147	0,08	19	15	14	32,0	17,8	AZ(U)X682M450EF1
	10000	DJ	76	222	0,08	13	10	10	42,5	23,6	AZ(U)X103M450DJ1
	10000	EJ	90	222	0,08	13	10	10	46,6	25,9	AZ(U)X103M450EJ1

Dimension, Quantity and Weight for box

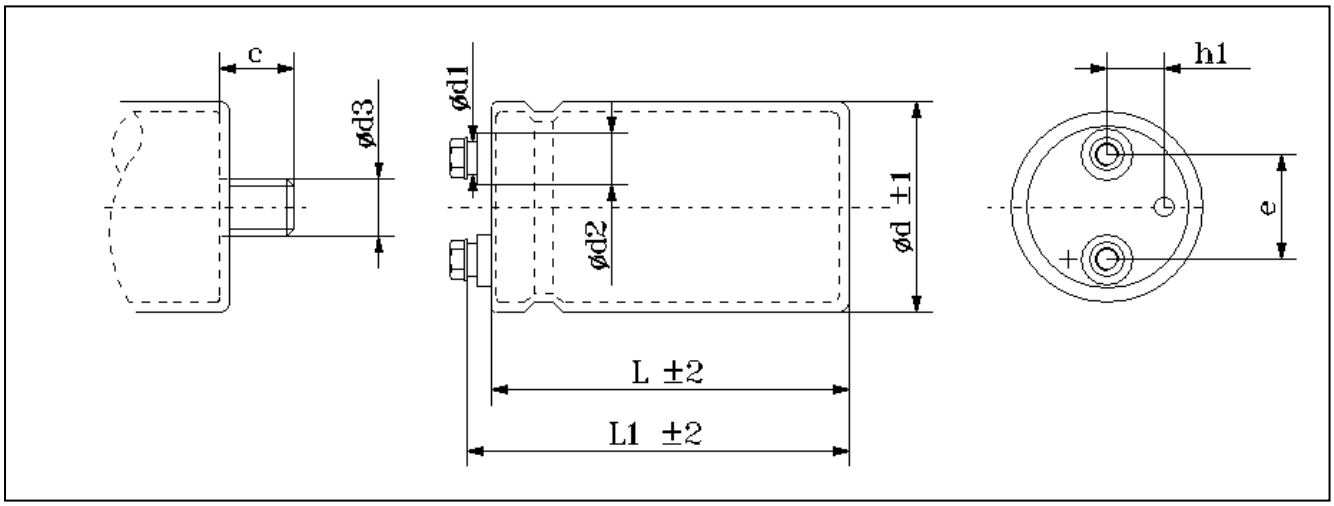

Case				Connections							Mounting Stud			Packaging	
Code	DxL	L1	h1	d1	d2	e	Terminal	Screw			Screw			Pcs/Box	Weight/box
							Code	Thread	Torque	Lenght	d3	c	Torque		
BC	51x105	109	13	13	18	22.2	X	M5	2,0	10	M12	16	10Nm	30	6-9
CC	63x107	111	16	13	18	28.6	X	M5	2,0	10	M12	16	10Nm	20	6-8
DC	76x107	111	19	13	18	31.8	X	M5	2,0	10	M12	16	10Nm	12	5-7
DF	76x147	151	19	13	18	31.8	X	M5	2,0	10	M12	16	10Nm	12	6-14
				17	23		G	M6	2,5						
DK	76x167	173	19	13	18	31.8	X	M5	2,0	10	M12	16	10Nm	12	6-14
				17	23		G	M6	2,5						
DJ	76x220	222	19	13	18	31.8	X	M5	2,0	10	M12	16	10Nm	8	9-11
				17	23		G	M6	2,5						
EC	90x107	112	19	17	23	31,8	G	M6	2,5	10	M12	16	10Nm	6	7-9
EF	90x147	153	19	17	23	31,8	G	M6	2,5	10	M12	16	10Nm	6	9-11
EJ	90x220	227	19	17	23	31,8	G	M6	2,5	10	M12	16	10Nm	6	8-12

All dimensions in mm, torque in Nm, weight in kg

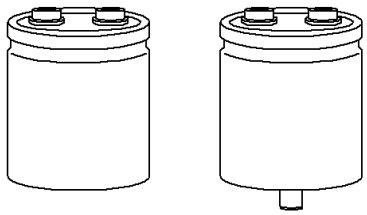

AT- ATU-

Itelcond

Series AT(U)- – 105°C 5000h

Capacitors screw terminal type

- AT- Flat Bottom
- ATU- Mounting Stud
- Capacitance Tolerance: -20 + 20% – standard (M)
- Capacitance Tolerance: -10 + 30% - on request (X)
- Climatic category: 40/105/56
- Case: 51x105 – 90x222
- Temperature – 40°C + 105°C
- All welded construction reliable electrical contact

Mechanical Outlines

- Case: aluminium made
- Terminals: screw
- Sealing: hermetic by EPR gasket, on a resin cover
- Pressure Release Vent: silicone-rubber
- Sleeve: self-extinguishing thermo shrinkable
- Size: see enclosed drawings
- Mounting Hardware: see hardware section
- External Material UL94-V0

Ordering Code: Example

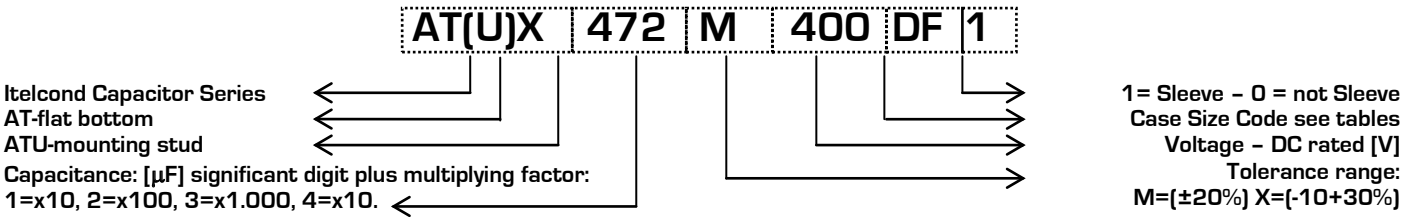

Ripple Current

The allowable values of ripple current in Ampères, are related to the temperature and frequency by following equation:

$$I_{Ripple} = K_t \bullet K_f \bullet I_{Ripple@105°C}$$

Where:

- IRipple@105°C is the limit given by tables, @ 105°C/100HZ
- Kt is the Temperature Correlation Factor
- Kf is the Frequency Correlation Factor

Note .Superimposed alternating voltage summed to DC volage must not exceed rated voltage, rated ripple current must not be exceeded and no reverse polarity is allowed

°C	40	55	65	75	85	95	105
Kt	2.50	2.40	2.20	2.00	1.80	1.30	1.00

Table 1-Kt Values

Hz	Kf
50	0.78
100	1.00
120	1.02
200	1.06
300	1.08
400	1.09
500	1.32
>1000	1.37

Table 2-Kf Values

Expected Lifetime End of Life Criteria

During useful life typical electrical parameters of electrolytic capacitor are subject to change.
End of Life criteria, when rated temperature, voltage and ripple are applied, are:

$\Delta C / C_{t0} \leq 30\%$ *Equation 1*

$ESR \leq 3 \bullet ESR_{t0}$ *Equation 2*

$I_f \leq I_{f t0}$ *Equation 3*

where t_0 is the initial value

Voltage Endurance Test Requirements

On Voltage Endurance Test are based Expected Lifetime Curves.
End of Life criteria, when rated temperature, and voltage are applied for 2'000hrs, are

$\Delta C / C_{t0} \leq 20\%$ *Equation 4*

$ESR \leq 1{,}3 \bullet ESR_{t0}$ *Equation 5*

$I_f \leq I_{f t0}$ *Equation 6*

where t_0 is the initial value

Expected Lifetime Vs Temperature and Ripple Current

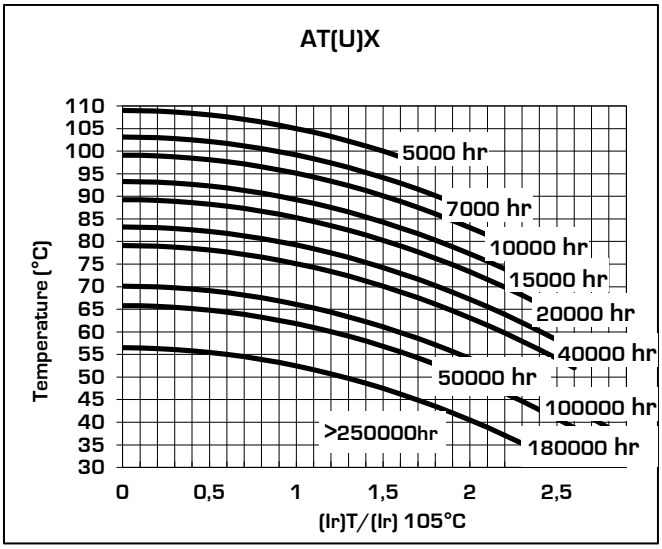

Table 3

Leakage Current

After the rated voltage has been applied to the capacitor for 5 minutes the leakage current must be within those limits.

Maximum limit	@25°C	$If \leq 1.3 \bullet \sqrt{C \bullet V}$
Operating limit	@25°C	$If \leq 1.2 \bullet \sqrt{C \bullet V}$

Where: If=leakage current [µA], C=capacitance [µF], V=rated voltage [V]

Surge Voltage

Working Voltage	350	400	420	450
Surge Voltage	385	440	420	495

	Capacitance	Case	Diam	Height	Tanδ	ESRmax | typ		Zmax	Iripple @100Hz		Ordering Code
	[μF]@100Hz		[mm]	[mm]	[%]@100Hz	[mΩ]@100Hz		[mΩ]@10KHz	[A]@55°C	[A]@85°C	(U) for mounting stud
350	2200	CC	63	107	0,09	65	52	49	17,4	7,0	AT(U)X222M350CC1
	2700	CC	63	107	0,09	53	42	40	19,3	7,7	AT(U)X272M350CC1
	3300	CC	63	107	0,09	43	35	33	21,3	8,5	AT(U)X332M350CC1
	3900	DC	76	147	0,09	37	29	28	29,6	11,8	AT(U)X392M350DC1
	4700	DC	76	147	0,09	30	24	23	32,5	13,0	AT(U)X472M350DC1
	6800	DF	76	147	0,09	21	17	16	39,1	15,6	AT(U)X682M350DF1
	8200	DF	76	147	0,09	17	14	13	42,9	17,2	AT(U)X822M350DF1
	10000	DJ	76	220	0,09	14	11	11	56,9	22,8	AT(U)X103M350DJ1
	12000	DJ	76	220	0,09	12	10	9	62,3	24,9	AT(U)X123M350DJ1
	15000	EJ	90	222	0,09	10	8	7	76,7	30,7	AT(U)X153M350EJ1
	18000	EJ	90	220	0,09	8	6	6	83,6	33,5	AT(U)X183M350EJ1
400	1000	CC	63	107	0,09	143	115	107	11,7	4,7	AT(U)X102M400CC1
	1500	CC	63	107	0,09	96	76	72	14,4	5,7	AT(U)X152M400CC1
	2200	CC	63	107	0,09	65	52	49	17,4	7,0	AT(U)X222M400CC1
	3300	CC	63	107	0,09	43	35	33	21,3	8,5	AT(U)X332M400CC1
	3900	DC	76	147	0,09	37	29	28	29,6	11,8	AT(U)X392M400DC1
	4700	DC	76	147	0,09	30	24	23	32,5	13,0	AT(U)X472M400DC1
	5600	DF	76	147	0,09	26	20	19	35,5	14,2	AT(U)X562M400DF1
	6800	DF	76	147	0,09	21	17	16	39,1	15,6	AT(U)X682M400DF1
	8200	DJ	76	220	0,09	17	14	13	51,5	20,6	AT(U)X822M400DJ1
	10000	DJ	76	220	0,09	14	11	11	56,9	22,8	AT(U)X103M400DJ1
	12000	EJ	90	220	0,09	12	10	9	68,3	27,3	AT(U)X123M400EJ1
450	1000	CC	63	107	0,09	143	115	107	11,7	4,7	AT(U)X102M450CC1
	1500	CC	63	107	0,09	96	76	72	14,4	5,7	AT(U)X152M450CC1
	2200	CC	63	107	0,10	72	58	54	16,5	6,6	AT(U)X222M450CC1
	3300	CC	63	107	0,12	58	46	43	18,5	7,4	AT(U)X332M450CC1
	3900	DC	76	147	0,12	49	39	37	25,6	10,3	AT(U)X392M450DC1
	4700	DC	76	147	0,12	41	33	30	28,1	11,3	AT(U)X472M450DC1
	5600	DF	76	147	0,10	28	23	21	33,7	13,5	AT(U)X562M450DF1
	6800	DF	76	147	0,10	23	19	18	37,1	14,8	AT(U)X682M450DF1
	8200	DJ	76	220	0,12	23	19	17	44,6	17,8	AT(U)X822M450DJ1
	10000	DJ	76	220	0,12	19	15	14	49,3	19,7	AT(U)X103M450DJ1

Dimension, Quantity and Weight for box

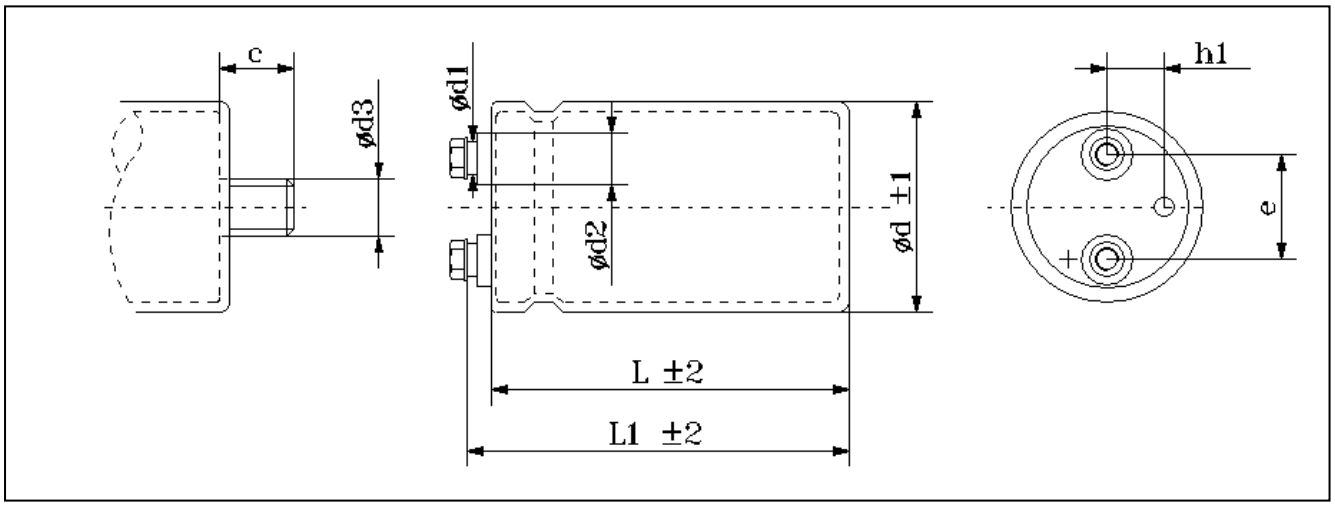

Case				Connections							Mounting Stud			Packaging	
Code	DxL	L1	h1	d1	d2	e	Terminal	Screw			Screw			Pcs/Box	Weight/box
							Code	Thread	Torque	Lenght	d3	c	Torque		
BC	51x105	109	13	13	18	22.2	X	M5	2,0	10	M12	16	10Nm	30	6-9
CC	63x107	111	16	13	18	28.6	X	M5	2,0	10	M12	16	10Nm	20	6-8
DC	76x107	111	19	13	18	31.8	X	M5	2,0	10	M12	16	10Nm	12	5-7
DF	76x147	151	19	13	18	31.8	X	M5	2,0	10	M12	16	10Nm	12	6-14
				17	23		G	M6	2,5						
DK	76x167	173	19	13	18	31.8	X	M5	2,0	10	M12	16	10Nm	12	6-14
				17	23		G	M6	2,5						
DJ	76x220	222	19	13	18	31.8	X	M5	2,0	10	M12	16	10Nm	8	9-11
				17	23		G	M6	2,5						
EC	90x107	112	19	17	23	31,8	G	M6	2,5	10	M12	16	10Nm	6	7-9
EF	90x147	153	19	17	23	31,8	G	M6	2,5	10	M12	16	10Nm	6	9-11
EJ	90x220	227	19	17	23	31,8	G	M6	2,5	10	M12	16	10Nm	6	8-12

All dimensions in mm, torque in Nm, weight in kg

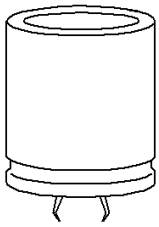

ARC

Series ARC– 85°C 2000h

Capacitors PCB type

- ARC 2 pins
- Capacitance Tolerance: -20 + 20% – standard (M)
- Self extinguishing construction and electrolyte
- Climatic category: 40/85/56
- Case: 30x40 – 45x100
- Temperature – 25°C + 85°C

Mechanical Outlines

- Case: aluminium made
- Terminals: solder pin
- Sealing: hermetic on Rubber Bakelite cover
- Pressure Release Vent: onto aluminium case
- No insulated bottom
- Sleeve: self-extinguishing thermo shrinkable
- Size: see enclosed drawings
- External Material UL94-V0

Ordering Code: Example

ARC	471	M	400	NC	1

Itelcond Capacitor Series
C: 2 pin
Capacitance: [µF] significant digit plus multiplying factor:
1=x10, 2=x100, 3=x1.000, 4=x10.

1= Sleeve – 0 = not Sleeve
Case Size Code see tables
Voltage – DC rated [V]
Tolerance range:
M=(±20%) X=(-10+30%)

Ripple Current

The allowable values of ripple current in Ampères, are related to the temperature and frequency by following equation:

$$I_{Ripple} = K_t \bullet K_f \bullet I_{Ripple@85°C}$$

Where:

- IRipple@85°C is the limit given by tables, @ 85°C/100HZ
- Kt is the Temperature Correlation Factor
- Kf is the Frequency Correlation Factor

Note .Superimposed alternating voltage summed to DC volage must not exceed rated voltage, rated ripple current must not be exceeded and no reverse polarity is allowed

°C	40	55	65	75	85
Kt	2.30	1.90	1.70	1.40	1.00

Table 1-Kt Values

	Kf	
Vn/Hz	V<50	V>50
50	0.90	0.88
100	1.00	1.00
300	1.14	1.20
400	1.18	1.25
500	1.20	1.35
>1000	1.25	1.40

Table 2-Kf Values

Expected Lifetime End of Life Criteria

During useful life typical electrical parameters of electrolytic capacitor are subject to change.
End of Life criteria, when rated temperature, voltage and ripple are applied, are:

$\Delta C / C_{t0} \leq 30\%$ *Equation 1*

$ESR \leq 3 \bullet ESR_{t0}$ *Equation 2*

$I_f \leq I_{f t0}$ *Equation 3*

where t_0 is the initial value

Voltage Endurance Test Requirements

Voltage Endurance Test are one of the basys for Expected Lifetime Curves.
End of Life criteria, when rated temperature, and voltage are applied for 2'000hrs, are

$\Delta C / C_{t0} \leq 10\%$ *Equation 4*

$ESR \leq 1{,}3 \bullet ESR_{t0}$ *Equation 5*

$I_f \leq I_{f t0}$ *Equation 6*

where t_0 is the initial value

Expected Lifetime Vs Temperature and Ripple Current

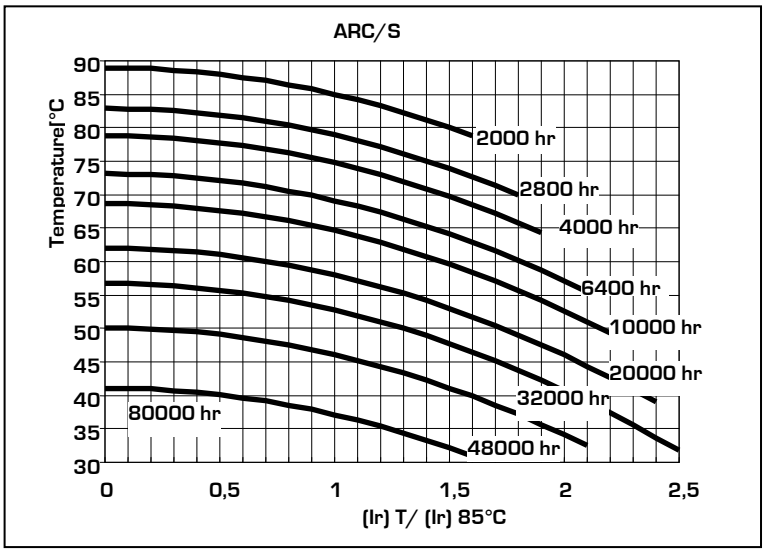

Table 3

Leakage Current

After the rated voltage has been applied to the capacitor for 5 minutes the leakage current must be within those limits.

Maximum limit	@25°C	If≤0,006xCxV
Operating limit	@25°C	If≤0,003xCxV

Where: If=leakage current [µA], C=capacitance [µF], V=rated voltage [V]

Surge Voltage

Working Voltage	200	250	350	400	450
Surge Voltage	230	290	385	440	495

	Capacitance	Case	Diam	Height	Tanδ	ESRmax | typ		Zmax	Iripple @100Hz		Ordering Code
	[µF]@100Hz		[mm]	[mm]	[%]@100Hz	[mΩ]@100Hz		[mΩ]@10KHz	[A]@55°C	[A]@85°C	
200	470	MB	30	40	0,09	244	195	183	2,4	1,2	ARC471M200MB1
	680	MB	30	40	0,09	169	135	126	2,8	1,5	ARC681M200MB1
	1000	MC	30	50	0,09	115	92	86	3,8	2,0	ARC102M200MC1
		NB	35	40	0,09	115	92	86	3,8	2,0	ARC102M200NB1
	1200	NB	35	40	0,09	96	76	72	4,1	2,2	ARC122M200NB1
	1500	NC	35	50	0,09	76	61	57	5,1	2,7	ARC152M200NC1
	1800	NC	35	50	0,09	64	51	48	5,5	2,9	ARC182M200NC1
250	470	MB	30	40	0,09	244	195	183	2,4	1,2	ARC471M250MB1
	680	MC	30	50	0,09	169	135	126	3,1	1,6	ARC681M250MC1
		NB	35	40	0,09	169	135	126	3,1	1,6	ARC681M250NB1
	1000	NB	35	40	0,09	115	92	86	3,8	2,0	ARC102M250NB1
		NC	35	50	0,09	115	92	86	4,1	2,2	ARC102M250NC1
	1500	PC	40	50	0,09	76	61	57	5,5	2,9	ARC152M250PC1
	2200	NE	35	75	0,09	52	42	39	7,3	3,8	ARC222M250NE1
400	330	MC	30	50	0,10	386	309	290	2,1	1,1	ARC331M400MC1
	470	MC	30	50	0,10	271	217	203	2,5	1,3	ARC471M400MC1
		PB	40	40	0,10	271	217	203	2,6	1,4	ARC471M400PB1
	560	NC	35	50	0,10	227	182	171	2,9	1,5	ARC561M400NC1
	680	NC	35	50	0,10	187	150	141	3,2	1,7	ARC681M400NC1
		PC	40	50	0,10	187	150	141	3,5	1,8	ARC681M400PC1
	1000	PE	40	75	0,10	127	102	96	5,0	2,7	ARC102M400PE1
	1200	PE	40	75	0,10	106	85	80	5,5	2,9	ARC122M400PE1
450	330	MC	30	50	0,13	502	401	376	1,8	1,0	ARC331M450MC1
	470	NC	35	50	0,13	352	282	264	2,4	1,2	ARC471M450NC1
	680	NC	35	50	0,13	244	195	183	2,8	1,5	ARC681M450NC1
		NN	35	60	0,13	244	195	183	3,1	1,6	ARC681M450NN1
		PC	40	50	0,13	244	195	183	3,1	1,6	ARC681M450PC1
	820	NE	35	75	0,13	202	162	151	3,7	2,0	ARC821M450NE1
	1000	PE	40	75	0,13	166	132	124	4,4	2,3	ARC102M450PE1

Dimension, Quantity and Weight for box

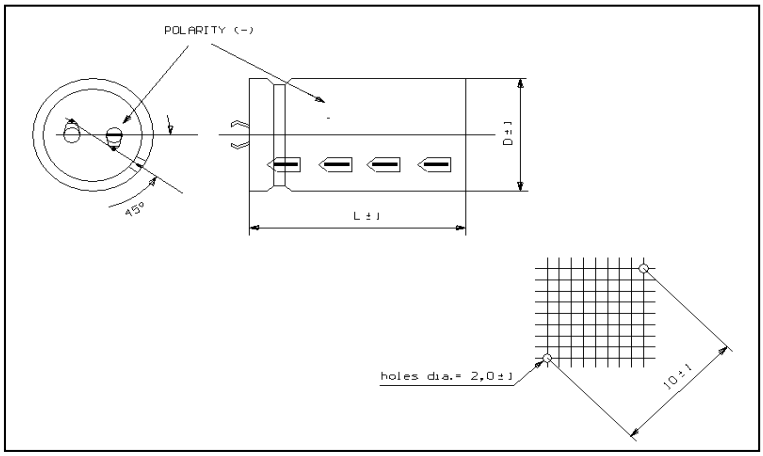

Case		Connections		Packaging	
Code	DxL	PIN Type		Pcs/Box	Weight/box
		Number	Lenght		
NB	35x40	2	6.3	100	6-8
NC	35x50	2	6.3	100	6-8
NN	35x60	2	6.3	100	5-7
NE	35x75	2	6.3	50	6-8
PB	40x40	2	6.3	100	6-8
PC	40x50	2	6.3	100	8-9
PN	40x60	2	6.3	100	8-10
PE	40x75	2	6.3	50	9-11

All dimensions in mm, torque in Nm, weight in kg

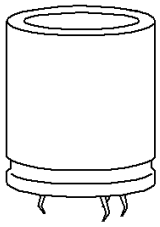

AKS

Series AKS– 85°C 5000h

Capacitors PCB type – 4 pins

- AKS 4 pins
- Capacitance Tolerance: -20 + 20% – standard (M)
- Self extinguishing construction and electrolyte
- Climatic category: 40/85/56
- Case: 30x40 – 45x100
- Temperature – 25°C + 85°C

Mechanical Outlines

- Case: aluminium made
- Terminals: solder pin
- Sealing: hermetic on Rubber Bakelite cover
- Pressure Release Vent: onto aluminium case
- Insulated bottom
- Sleeve: self-extinguishing thermo shrinkable
- Size: see enclosed drawings
- External Material UL94-V0

Ordering Code: Example

AKS	471	M	400	NC	1

Itelcond Capacitor Series

Capacitance: [µF] significant digit plus multiplying factor:
1=x10, 2=x100, 3=x1.000, 4=x10.

1= Sleeve – 0 = not Sleeve
Case Size Code see tables
Voltage – DC rated [V]
Tolerance range:
M=(±20%)

Ripple Current

The allowable values of ripple current in Ampères, are related to the temperature and frequency by following equation:

$$I_{Ripple} = K_t \bullet K_f \bullet I_{Ripple@85°C}$$

Where:

- IRipple@85°C is the limit given by tables, @ 85°C/100HZ
- Kt is the Temperature Correlation Factor
- Kf is the Frequency Correlation Factor

Note .Superimposed alternating voltage summed to DC volage must not exceed rated voltage, rated ripple current must not be exceeded and no reverse polarity is allowed

°C	40	55	65	75	85
Kt	2.30	1.90	1.70	1.40	1.00

Table 1-Kt Values

	Kf	
Vn/Hz	V<50	V>50
50	0.90	0.88
100	1.00	1.00
300	1.14	1.20
400	1.18	1.25
500	1.20	1.35
>1000	1.25	1.40

Table 2-Kf Values

Expected Lifetime End of Life Criteria

During useful life typical electrical parameters of electrolytic capacitor are subject to change.
End of Life criteria, when rated temperature, voltage and ripple are applied, are:

$\Delta C / C_{t0} \leq 30\%$ *Equation 1*

$ESR \leq 3 \bullet ESR_{t0}$ *Equation 2*

$I_f \leq I_{f t0}$ *Equation 3*

where t_0 is the initial value

Voltage Endurance Test Requirements

Voltage Endurance Test are one of the basys for Expected Lifetime Curves.
End of Life criteria, when rated temperature, and voltage are applied for 2'000hrs, are

$\Delta C / C_{t0} \leq 10\%$ *Equation 4*

$ESR \leq 1{,}3 \bullet ESR_{t0}$ *Equation 5*

$I_f \leq I_{f t0}$ *Equation 6*

where t_0 is the initial value

Expected Lifetime Vs Temperature and Ripple Current

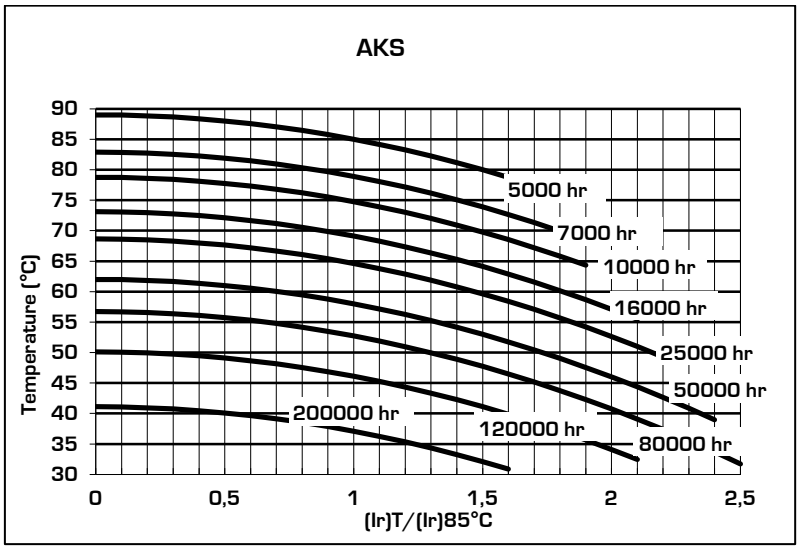

Table 3

Leakage Current

After the rated voltage has been applied to the capacitor for 5 minutes the leakage current must be within those limits.

Maximum limit	@25°C	If≤0,004xCxV
Operating limit	@25°C	If≤0,001xCxV

Where: If=leakage current [µA], C=capacitance [µF], V=rated voltage [V]

Surge Voltage

Working Voltage	40	50	63	75	100	160	200	250	350	400	450	500
Surge Voltage	46	58	73	86	115	185	230	290	385	440	495	525

	Capacitance	Case	Diam	Height	Tanδ	ESRmax | typ		Zmax	Iripple @100Hz		Ordering Code
	[µF]@100Hz		[mm]	[mm]	[%]@100Hz	[mΩ]@100Hz		[mΩ]@10KHz	[A]@55°C	[A]@85°C	
40	15000	NC	35	50	0,34	29	23	22	13,7	7,2	AKS153M040NC1
	22000	PC	40	50	0,40	23	19	17	16,5	8,7	AKS223M040PC1
	33000	PE	40	75	0,46	18	14	13	22,5	11,8	AKS333M040PE1
	47000	PG	40	100	0,55	15	12	11	27,9	14,7	AKS473M040PG1
63	10000	NC	35	50	0,26	33	26	25	12,8	6,7	AKS103M063NC1
		PC	40	50	0,24	31	24	23	14,4	7,6	AKS103M063PC1
	15000	PE	40	75	0,29	25	20	18	19,1	10,1	AKS153M063PE1
	22000	PG	40	100	0,32	19	15	14	25,0	13,2	AKS223M063PG1
100	3300	NC	35	50	0,11	42	34	32	11,3	6,0	AKS332M100NC1
	4700	PC	40	50	0,13	35	28	26	13,4	7,1	AKS472M100PC1
	6800	PE	40	75	0,13	24	19	18	19,2	10,1	AKS682M100PE1
	10000	PG	40	100	0,13	17	13	12	26,5	13,9	AKS103M100PG1
200	1500	NC	35	50	0,09	76	61	57	8,4	4,4	AKS152M200NC1
	2200	PC	40	50	0,09	52	42	39	11,0	5,8	AKS222M200PC1
	2200	PE	40	75	0,09	52	42	39	13,1	6,9	AKS222M200PE1
	3300	PG	40	100	0,09	35	28	26	18,3	9,6	AKS332M200PG1
250	1000	NC	35	50	0,09	115	92	86	6,9	3,6	AKS101M250NC1
	1500	PC	40	50	0,09	76	61	57	9,1	4,8	AKS152M250PC1
	1500	PE	40	75	0,09	76	61	57	10,8	5,7	AKS152M250PE1
	2200	PG	40	100	0,09	52	42	39	14,9	7,9	AKS222M250PG1
400	330	NB	35	40	0,10	386	309	290	3,6	1,9	AKS331M400NB1
	470	NC	35	50	0,10	271	217	203	4,7	2,5	AKS471M400NC1
	680	NN	35	60	0,10	187	150	141	6,2	3,3	AKS681M400NN1
		NE	35	75	0,10	187	150	141	6,8	3,6	AKS681M400NE1
		PC	40	50	0,10	187	150	141	6,2	3,2	AKS681M400PC1
		PN	40	60	0,10	187	150	141	6,7	3,5	AKS681M400PN1
	1000	NN	35	60	0,10	127	102	96	7,5	3,9	AKS102M400NN1
		NE	35	75	0,10	127	102	96	8,3	4,4	AKS102M400NE1
		PE	40	75	0,10	127	102	96	8,9	4,7	AKS102M400PE1
		PG	40	100	0,10	127	102	96	10,1	5,3	AKS102M400PG1
	1200	PG	40	100	0,10	106	85	80	11,1	5,8	AKS122M400PG1
	1500	PE	40	75	0,10	85	68	64	10,9	5,7	AKS152M400PE1
		QE	45	75	0,10	85	68	64	11,7	6,1	AKS152M400QE1
450	220	NB	30	40	0,12	695	556	521	2,5	1,3	AKS221M450NB1
		NC	35	50	0,12	695	556	521	3,0	1,6	AKS221M450NC1
	330	NC	35	50	0,12	463	371	347	3,6	1,9	AKS331M450NC1
	470	NC	35	50	0,12	325	260	244	4,3	2,3	AKS471M450NC1
	680	PC	40	50	0,12	225	180	169	5,6	3,0	AKS681M450PC1
		NE	35	75	0,12	225	180	169	6,2	3,3	AKS681M450NE1
		PE	40	75	0,12	225	180	169	6,7	3,5	AKS681M450PE1
	1000	NE	35	75	0,12	153	122	115	7,5	4,0	AKS102M450NE1
		PN	40	60	0,12	153	122	115	7,4	3,9	AKS102M450PN1

	Capacitance	Case	Diam	Height	Tanδ	ESRmax | typ		Zmax	Iripple @100Hz		Ordering Code
	[µF]@100Hz		[mm]	[mm]	[%]@100Hz	[mΩ]@100Hz		[mΩ]@10KHz	[A]@55°C	[A]@85°C	
450	1000	PE	40	75	0,12	153	122	115	8,1	4,3	AKS102M450PE1
		PG	40	100	0,12	153	122	115	9,2	4,9	AKS102M450PG1
	1500	PG	40	100	0,12	102	82	76	11,3	6,0	AKS152M450PG1

Dimension, Quantity and Weight for box

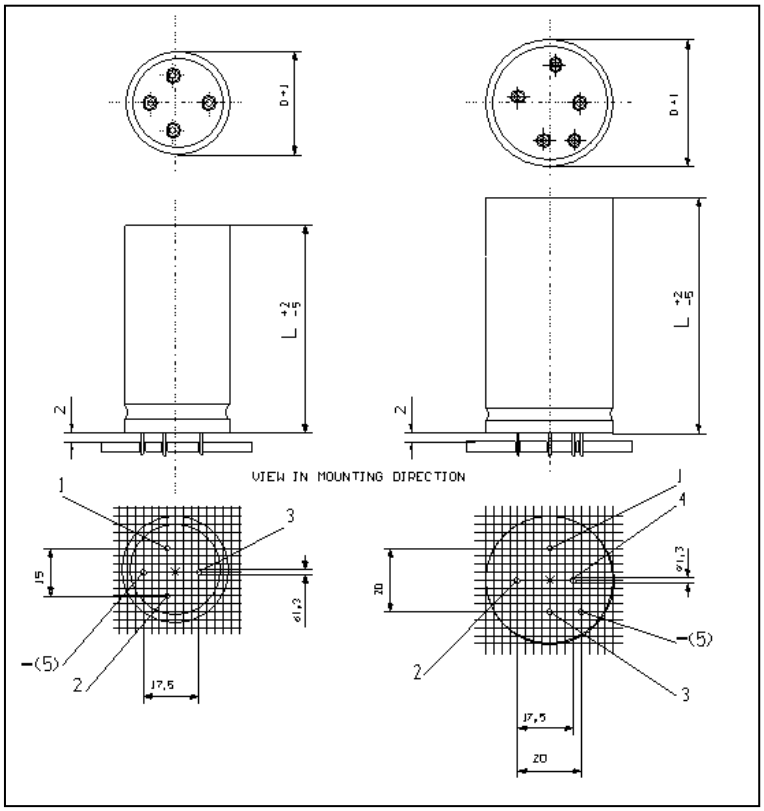

Case		Connections	Packaging	
Code	DxL	PIN- DIN Type Number	Pcs/Box	Weight/box
NB	35x40	4	100	6-8
NC	35x50	4	100	6-8
NN	35x60	4	100	5-7
NE	35x75	4	50	6-8
PB	40x40	5	100	6-8
PC	40x50	5	100	8-9
PN	40x60	5	100	8-10
PE	40x75	5	50	9-11
PG	40x100	5	50	6-8

All dimensions in mm, torque in Nm, weight in kg

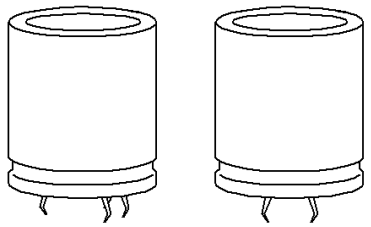

ACS ACC

Itelcond

Series ACC ACS– 85°C 5000h

Capacitors PCB type

- ACC 2 pins
- ACS 4 pins
- Capacitance Tolerance: -20 + 20% – standard (M)
- Self extinguishing construction and electrolyte
- Climatic category: 40/85/56
- Case: 30x40 – 45x100
- Temperature – 25°C + 85°C

Mechanical Outlines

- Case: aluminium made
- Terminals: solder pin
- Sealing: hermetic on Rubber Bakelite cover
- Pressure Release Vent: onto aluminium case
- No insulated bottom
- Sleeve: self-extinguishing thermo shrinkable
- Size: see enclosed drawings
- External Material UL94-V0

Ordering Code: Example

AC*	471	M	400	NC	1

Itelcond Capacitor Series

Capacitance: [μF] significant digit plus multiplying factor:
1=x10, 2=x100, 3=x1.000, 4=x10.

1= Sleeve – 0 = not Sleeve
Case Size Code see tables
Voltage – DC rated [V]
Tolerance range:
M=(±20%)

Ripple Current

The allowable values of ripple current in Ampères, are related to the temperature and frequency by following equation:

$$I_{Ripple} = K_t \bullet K_f \bullet I_{Ripple@85°C}$$

Where:

- IRipple@85°C is the limit given by tables, @ 85°C/100HZ
- Kt is the Temperature Correlation Factor
- Kf is the Frequency Correlation Factor

Note .Superimposed alternating voltage summed to DC volage must not exceed rated voltage, rated ripple current must not be exceeded and no reverse polarity is allowed

°C	40	55	65	75	85
Kt	2.30	1.90	1.70	1.40	1.00

Table 1-Kt Values

	Kf	
Vn/Hz	V<50	V>50
50	0.90	0.88
100	1.00	1.00
300	1.14	1.20
400	1.18	1.25
500	1.20	1.35
>1000	1.25	1.40

Table 2-Kf Values

Expected Lifetime End of Life Criteria

During useful life typical electrical parameters of electrolytic capacitor are subject to change.
End of Life criteria, when rated temperature, voltage and ripple are applied, are:

$\Delta C / C_{t0} \leq 30\%$ *Equation 1*

$ESR \leq 3 \bullet ESR_{t0}$ *Equation 2*

$I_f \leq I_{f t0}$ *Equation 3*

where t_0 is the initial value

Voltage Endurance Test Requirements

On Voltage Endurance Test are based Expected Lifetime Curves.
End of Life criteria, when rated temperature, and voltage are applied for 2'000hrs, are

$\Delta C / C_{t0} \leq 10\%$ *Equation 4*

$ESR \leq 1{,}3 \bullet ESR_{t0}$ *Equation 5*

$I_f \leq I_{f t0}$ *Equation 6*

where t_0 is the initial value

Expected Lifetime Vs Temperature and Ripple Current

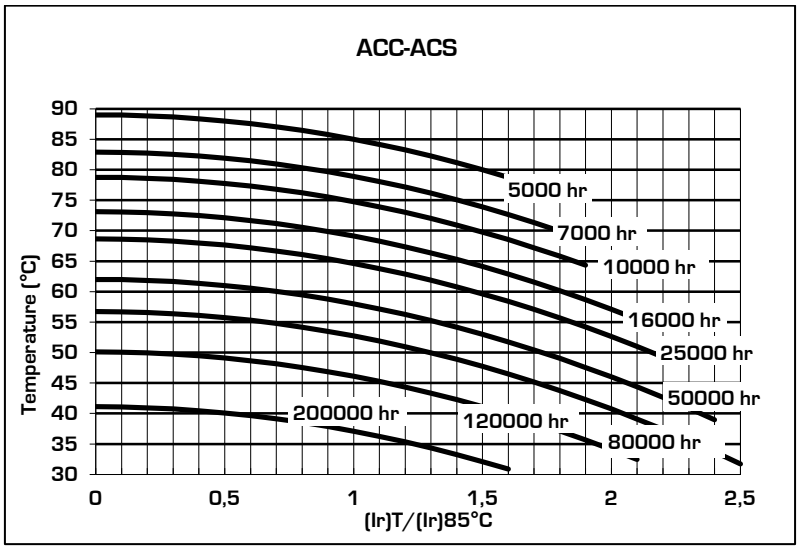

Table 3

Leakage Current

After the rated voltage has been applied to the capacitor for 5 minutes the leakage current must be within those limits.

Maximum limit	@25°C	If≤0,004xCxV
Operating limit	@25°C	If≤0,001xCxV

Where: If=leakage current [µA], C=capacitance [µF], V=rated voltage [V]

Surge Voltage

Working Voltage	40	50	63	75	100	160	200	250	350	400	450	500
Surge Voltage	46	58	73	86	115	185	230	290	385	440	495	525

	Capacitance	Case	Diam	Height	Tanδ	ESRmax | typ		Zmax	Iripple @100Hz		Ordering Code
	[µF]@100Hz		[mm]	[mm]	[%]@100Hz	[mΩ]@100Hz		[mΩ]@10KHz	[A]@55°C	[A]@85°C	*= C, 2 Pins | S, 4 Pins
40	6800	MB	30	40	0,30	56	45	42	8,2	4,3	AC*682M040MB1
	10000	MC	30	50	0,32	41	33	31	10,6	5,6	AC*103M040MC1
		NB	35	40	0,36	46	37	34	9,9	5,2	AC*103M040NB1
	15000	NC	35	50	0,36	31	24	23	13,3	7,0	AC*153M040NC1
	22000	PC	40	50	0,48	28	22	21	15,1	7,9	AC*223M040PC1
	33000	PE	40	75	0,48	19	15	14	22,0	11,6	AC*333M040PE1
	47000	PG	40	100	0,48	13	10	10	29,9	15,7	AC*473M040PG1
63	4700	MB	30	40	0,21	57	46	43	8,1	4,3	AC*472M063MB1
	6800	MC	30	50	0,21	39	31	30	10,8	5,7	AC*682M063MC1
		NB	35	40	0,24	45	36	34	10,0	5,3	AC*682M063NB1
	10000	NC	35	50	0,24	31	24	23	13,3	7,0	AC*103M063NC1
	12000	PC	40	50	0,29	31	25	23	14,4	7,6	AC*123M063PC1
	15000	PE	40	75	0,29	25	20	18	19,1	10,1	AC*153M063PE1
	22000	PG	40	100	0,29	17	13	13	26,3	13,8	AC*223M063PG1
100	1500	MB	30	40	0,09	76	61	57	7,0	3,7	AC*152M100MB1
	2200	MC	30	50	0,10	58	46	43	8,9	4,7	AC*222M100MC1
		NB	35	40	0,11	64	51	48	8,4	4,4	AC*222M100NB1
	3300	MC	30	50	0,12	46	37	35	9,9	5,2	AC*332M100MC1
	4700	NC	35	50	0,12	33	26	24	12,9	6,8	AC*472M100NC1
	5600	PC	40	50	0,12	27	22	20	15,2	8,0	AC*562M100PC1
	6800	PE	40	75	0,12	22	18	17	20,0	10,5	AC*682M100PE1
	10000	PG	40	100	0,12	15	12	11	27,6	14,5	AC*103M100PG1
200	680	MB	30	40	0,08	150	120	112	5,0	2,6	AC*681M200MB1
	1000	NB	35	40	0,08	102	82	76	6,7	3,5	AC*102M200NB1
	1200	MC	30	50	0,08	85	68	64	7,3	3,9	AC*122M200MC1
	1500	NC	35	50	0,08	68	54	51	8,9	4,7	AC*152M200NC1
	2200	NC	35	50	0,08	46	37	35	10,8	5,7	AC*222M200NC1
	2700	PE	40	75	0,08	38	30	28	15,4	8,1	AC*272M200PE1
	3300	PG	40	100	0,08	31	25	23	19,4	10,2	AC*332M200PG1
		QC	45	50	0,08	31	25	23	15,4	8,1	AC*332M200QC1
	3900	QE	45	75	0,08	26	21	20	19,8	10,4	AC*392M200QE1
	4700	QG	45	100	0,08	22	17	16	24,7	13,0	AC*472M200QG1
250	470	MB	30	40	0,08	217	173	163	4,2	2,2	AC*471M250MB1
	1000	MC	30	50	0,08	102	82	76	6,7	3,5	AC*102M250MC1
		NB	35	40	0,08	102	82	76	6,7	3,5	AC*102M250NB1
	1500	NC	35	50	0,08	68	54	51	8,9	4,7	AC*152M250NC1
	1800	PC	40	50	0,08	57	45	42	10,6	5,6	AC*182M250PC1
	2200	NE	35	75	0,08	46	37	35	12,9	6,8	AC*222M250NE1
		QC	45	50	0,08	46	37	35	12,5	6,6	AC*222M250QC1
	2700	PE	40	75	0,08	38	30	28	15,4	8,1	AC*272M250PE1
	3300	PG	40	100	0,08	31	25	23	19,4	10,2	AC*332M250PG1

	Capacitance	Case	Diam	Height	Tanδ	ESRmax | typ		Zmax	Iripple @100Hz		Ordering Code
	[µF]@100Hz		[mm]	[mm]	[%]@100Hz	[mΩ]@100Hz		[mΩ]@10KHz	[A]@55°C	[A]@85°C	* = C, 2 Pins | S, 4 Pins
250	3300	QE	45	75	0,08	31	25	23	18,2	9,6	AC*332M250QE1
	3900	QG	45	100	0,08	26	21	20	22,5	11,8	AC*392M250QG1
400	220	MB	30	40	0,10	579	463	434	3,3	1,7	AC*221M400MB1
	330	MB	30	40	0,10	386	309	290	4,0	2,1	AC*331M400MB1
		MC	30	50	0,10	386	309	290	4,4	2,3	AC*331M400MC1
	390	MB	30	40	0,10	327	261	245	4,3	2,3	AC*391M400MB1
		MC	30	50	0,10	327	261	245	4,8	2,5	AC*391M400MC1
		NC	35	50	0,10	327	261	245	5,2	2,7	AC*391M400NC1
	470	MC	30	50	0,10	271	217	203	5,2	2,8	AC*471M400MC1
		NB	35	40	0,10	271	217	203	5,2	2,7	AC*471M400NB1
		NC	35	50	0,10	271	217	203	5,7	3,0	AC*471M400NC1
		PB	40	40	0,10	271	217	203	5,6	3,0	AC*471M400PB1
		NN	35	60	0,10	271	217	203	6,2	3,2	AC*471M400NN1
	560	NC	35	50	0,10	227	182	171	6,2	3,3	AC*561M400NC1
	680	NC	35	50	0,10	187	150	141	6,9	3,6	AC*681M400NC1
		NN	35	60	0,10	187	150	141	7,4	3,9	AC*681M400NN1
		NE	35	75	0,10	187	150	141	8,2	4,3	AC*681M400NE1
		PC	40	50	0,10	187	150	141	7,4	3,9	AC*681M400PC1
	820	NN	35	60	0,10	155	124	117	8,2	4,3	AC*821M400NN1
		NE	35	75	0,10	155	124	117	9,0	4,7	AC*821M400NE1
		PC	40	50	0,10	155	124	117	8,1	4,3	AC*821M400PC1
	1000	NN	35	60	0,10	127	102	96	9,0	4,7	AC*102M400NN1
		NE	35	75	0,10	127	102	96	9,9	5,2	AC*102M400NE1
		PN	40	60	0,10	127	102	96	9,7	5,1	AC*102M400PN1
		PE	40	75	0,10	127	102	96	10,7	5,6	AC*102M400PE1
		QC	45	50	0,10	127	102	96	9,6	5,1	AC*102M400QC1
	1200	NE	35	75	0,10	106	85	80	10,9	5,7	AC*122M400NE1
		PE	40	75	0,10	106	85	80	11,7	6,2	AC*122M400PE1
	1500	PE	40	75	0,10	85	68	64	13,1	6,9	AC*152M400PE1
		PG	40	100	0,10	85	68	64	14,9	7,8	AC*152M400PG1
		QN	45	60	0,10	85	68	64	12,7	6,7	AC*152M400QN1
		QE	45	75	0,10	85	68	64	14,0	7,4	AC*152M400QE1
		QG	45	100	0,10	85	68	64	15,9	8,4	AC*152M400QG1
	1800	QE	45	75	0,10	71	57	53	15,3	8,1	AC*182M400QE1
	2200	QG	45	100	0,10	58	46	43	19,3	10,1	AC*222M400QG1
450	150	MB	30	40	0,12	1019	815	764	2,5	1,3	AC*151M450MB1
	220	MB	30	40	0,12	695	556	521	3,0	1,6	AC*221M450MB1
	330	MC	30	50	0,12	463	371	347	4,0	2,1	AC*331M450MC1
		NB	35	40	0,12	463	371	347	4,0	2,1	AC*331M450NB1
		NC	35	50	0,12	463	371	347	4,4	2,3	AC*331M450NC1
	470	NC	35	50	0,12	325	260	244	5,2	2,7	AC*471M450NC1
		NN	35	60	0,12	325	260	244	5,6	3,0	AC*471M450NN1

	Capacitance	Case	Diam	Height	Tanδ	ESRmax | typ		Zmax	Iripple @100Hz		Ordering Code
	[μF]@100Hz		[mm]	[mm]	[%]@100Hz	[mΩ]@100Hz		[mΩ]@10KHz	[A]@55°C	[A]@85°C	*= C, 2 Pins | S, 4 Pins
450	470	PB	40	40	0,12	325	260	244	5,1	2,7	AC*471M450PB1
	560	NC	35	50	0,12	273	218	205	5,7	3,0	AC*561M450NC1
		NE	35	75	0,12	273	218	205	6,8	3,6	AC*561M450NE1
		PC	40	50	0,12	273	218	205	6,1	3,2	AC*561M450PC1
		PE	40	75	0,12	273	218	205	7,3	3,8	AC*561M450PE1
	680	NN	35	60	0,12	225	180	169	6,8	3,6	AC*681M450NN1
		NE	35	75	0,12	225	180	169	7,5	3,9	AC*681M450NE1
		PC	40	50	0,12	225	180	169	6,8	3,6	AC*681M450PC1
	820	NN	35	60	0,12	186	149	140	7,4	3,9	AC*821M450NN1
		NE	35	75	0,12	186	149	140	8,2	4,3	AC*821M450NE1
	1000	PN	40	60	0,12	153	122	115	8,9	4,7	AC*102M450PN1
		PE	40	75	0,12	153	122	115	9,8	5,1	AC*102M450PE1
		PG	40	100	0,12	153	122	115	11,1	5,9	AC*102M450PG1
		QC	45	50	0,12	153	122	115	8,8	4,6	AC*102M450QC1
	1360	PG	40	100	0,12	112	90	84	13,0	6,8	AC*132M450PG1
	1500	PG	40	100	0,12	102	82	76	13,6	7,2	AC*152M450PG1
		QE	45	75	0,12	102	82	76	12,8	6,7	AC*152M450QE1
	1800	QG	45	100	0,12	85	68	64	15,9	8,4	AC*182M450QG1
	2200	QG	45	100	0,12	69	56	52	17,6	9,3	AC*222M450QG1
500	220	MC	30	50	0,15	869	695	651	2,1	1,1	AC*221M450MC1
	330	NC	35	50	0,15	579	463	434	2,9	1,5	AC*331M450NC1
	390	NC	35	50	0,15	490	392	367	3,1	1,6	AC*391M450NC1
	470	NN	35	60	0,15	407	325	305	3,7	1,9	AC*471M450NN1
	470	PC	40	50	0,15	407	325	305	3,7	1,9	AC*471M450PC1
	560	NE	35	75	0,15	341	273	256	4,5	2,3	AC*561M450NE1
	560	PC	40	50	0,15	341	273	256	4,0	2,1	AC*561M450PC1
	680	PN	40	60	0,15	281	225	211	4,8	2,5	AC*681M450PN1
	680	PE	40	75	0,15	281	225	211	5,3	2,8	AC*681M450PE1
	680	QC	45	50	0,15	281	225	211	4,8	2,5	AC*681M450QC1
	1000	PG	40	100	0,15	191	153	143	7,3	3,8	AC*102M450PG1
	1000	QE	45	75	0,15	191	153	143	6,9	3,6	AC*102M450QE1
	1200	QG	45	100	0,15	159	127	119	8,5	4,5	AC*122M450QG1

Dimension, Quantity and Weight for box

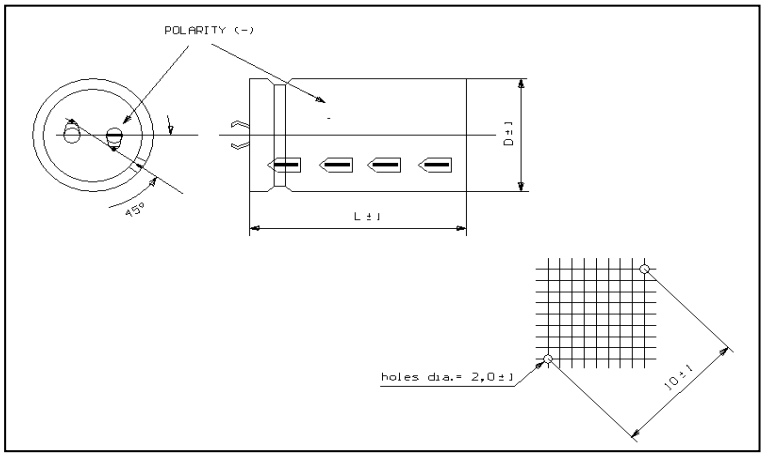

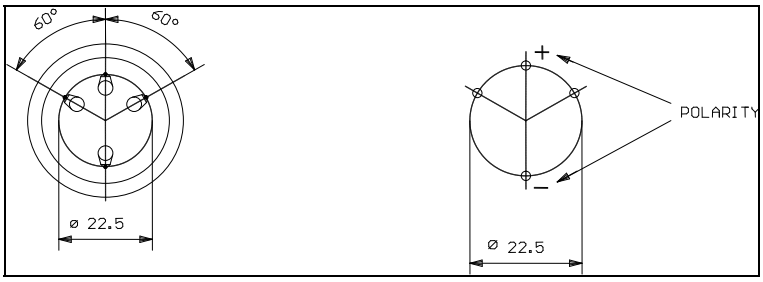

Case		Connections			Packaging	
Code	DxL	PIN			Pcs/Box	Weight/box
		Number		Lenght		
MB	30x105	2		6.3	100	4-6
MC	30x50	2		6.3	100	4-6
NB	35x40	2	4	6.3	100	6-8
NC	35x50	2	4	6.3	100	6-8
NN	35x60	2	4	6.3	100	5-7
NE	35x75	2	4	6.3	50	6-8
PB	40x40	2	4	6.3	100	6-8
PC	40x50	2	4	6.3	100	8-9
PN	40x60	2	4	6.3	100	8-10
PE	40x75	2	4	6.3	50	9-11
PG	40x100	2	4	6.3	50	6-8
QC	45x50		4	6.3	30	6-8
QN	45x60		4	6.3	30	
QE	45x75		4	6.3	30	7-9
QG	45x100		4	6.3	30	8-10

All dimensions in mm, torque in Nm, weight in kg

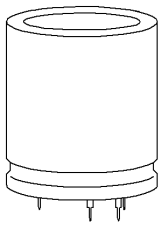

AZK

Series AZK– 105°C 3000h

Capacitors PCB type –DIN style Solder Pins

- AZK DIN 4/5 pins
- Capacitance Tolerance: -20 + 20% – standard (M)
- Climatic category: 25/105/56
- Case: 30x40 – 40x100
- Temperature – 25°C + 105°C

Mechanical Outlines

- Case: aluminium made
- Terminals: solder pin
- Sealing: hermetic on Rubber Bakelite cover
- Pressure Release Vent: onto aluminium case
- No insulated bottom
- Sleeve: self-extinguishing thermo shrinkable
- Size: see enclosed drawings
- External Material UL94-V0

Ordering Code: Example

AZK	471	M	400	NC	1

Itelcond Capacitor Series

Capacitance: [µF] significant digit plus multiplying factor:
1=x10, 2=x100, 3=x1.000, 4=x10.

1= Sleeve – 0 = not Sleeve
Case Size Code see tables
Voltage – DC rated [V]
Tolerance range:
M=(±20%)

Ripple Current

The allowable values of ripple current in Ampères, are related to the temperature and frequency by following equation:

$$I_{Ripple} = K_t \bullet K_f \bullet I_{Ripple@105°C}$$

Where:

- IRipple@105°C is the limit given by tables, @ 105°C/100HZ
- Kt is the Temperature Correlation Factor
- Kf is the Frequency Correlation Factor

Note .Superimposed alternating voltage summed to DC volage must not exceed rated voltage, rated ripple current must not be exceeded and no reverse polarity is allowed

°C	50	65	75	85	95	105
Kt	2.40	2.20	2.10	1.80	1.30	1.00

Table 1-Kt Values

	Kf
Vn/Hz	V>160
50	0.88
100	1.00
300	1.20
400	1.25
500	1.35
>1000	1.40

Table 2-Kf Values

Expected Lifetime End of Life Criteria

During useful life typical electrical parameters of electrolytic capacitor are subject to change.
End of Life criteria, when rated temperature, voltage and ripple are applied, are:

$\Delta C / C_{t0} \leq 30\%$ *Equation 1*

$ESR \leq 3 \bullet ESR_{t0}$ *Equation 2*

$I_f \leq I_{f t0}$ *Equation 3*

where t_0 is the initial value

Voltage Endurance Test Requirements

On Voltage Endurance Test are based Expected Lifetime Curves.
End of Life criteria, when rated temperature, and voltage are applied for 2'000hrs, are

$\Delta C / C_{t0} \leq 10\%$ *Equation 4*

$ESR \leq 1{,}3 \bullet ESR_{t0}$ *Equation 5*

$I_f \leq I_{f t0}$ *Equation 6*

where t_0 is the initial value

Expected Lifetime Vs Temperature and Ripple Current

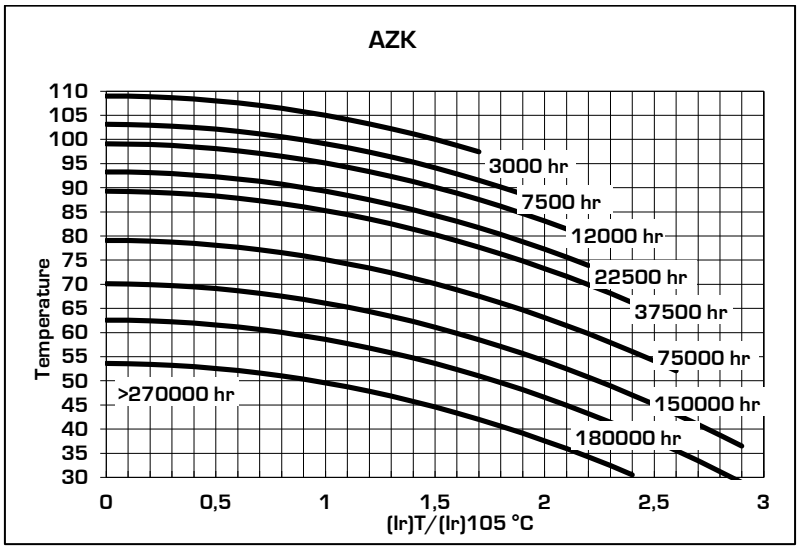

Table 3

Leakage Current

After the rated voltage has been applied to the capacitor for 5 minutes the leakage current must be within those limits.

Maximum limit	@25°C	If≤0,004xCxV
Operating limit	@25°C	If≤0,001xCxV

Where: If=leakage current [µA], C=capacitance [µF], V=rated voltage [V]

Surge Voltage

Working Voltage	200	250	400	450
Surge Voltage	230	290	440	495

	Capacitance	Case	Diam	Height	Tanδ	ESRmax | typ		Zmax	Iripple @100Hz		Ordering Code
	[µF]@100Hz		[mm]	[mm]	[%]@100Hz	[mΩ]@100Hz		[mΩ]@10KHz	[A]@85°C	[A]@105°C	
200	470	NB	35	40	0,10	271	217	203	3,2	1,8	AZK471M200NB1
	680	NC	35	50	0,10	187	150	141	4,2	2,3	AZK681M200NC1
	1000	NC	35	50	0,10	127	102	96	5,1	2,8	AZK102M200NC1
	1500	NE	35	75	0,10	85	68	64	7,4	4,1	AZK152M200NE1
		PC	40	50	0,10	85	68	64	6,7	3,7	AZK152M200PC1
	2200	PE	40	100	0,10	58	46	43	11,0	6,1	AZK222M200PE1
	3300	PG	40	100	0,10	39	31	29	13,5	7,5	AZK332M200PG1
250	470	MB	30	40	0,10	271	217	203	2,9	1,6	AZK471M250MB1
	680	NB	35	40	0,10	187	150	141	3,8	2,1	AZK681M250NB1
	1000	PC	40	50	0,10	127	102	96	5,5	3,1	AZK102M250PC1
	1500	PE	40	75	0,10	85	68	64	8,0	4,4	AZK152M250PE1
	2200	PG	40	100	0,10	58	46	43	11,0	6,1	AZK222M250PG1
400	330	NB	30	50	0,10	386	309	290	2,7	1,5	AZK331M400NB1
	470	NC	30	50	0,10	271	217	203	3,2	1,8	AZK471M400NC1
	680	NE	40	40	0,10	187	150	141	4,1	2,3	AZK681M400NE1
		PC	35	50	0,10	187	150	141	4,2	2,3	AZK681M400PC1
	1000	NE	35	75	0,10	127	102	96	6,1	3,4	AZK102M400NE1
		PE	35	50	0,10	127	102	96	5,1	2,8	AZK102M400PE1
		PG	40	50	0,10	127	102	96	5,5	3,1	AZK102M400PG1
	1500	PG	40	75	0,10	85	68	64	8,0	4,4	AZK152M400PG1
450	220	NB	30	40	0,10	579	463	434	2,0	1,1	AZK221M450NB1
	330	NC	35	50	0,10	386	309	290	2,9	1,6	AZK331M450NC1
	470	NC	35	50	0,10	271	217	203	3,5	1,9	AZK471M450NC1
	560	PC	40	50	0,10	227	182	171	4,1	2,3	AZK561M450PC1
		NE	35	75	0,10	227	182	171	4,5	2,5	AZK561M450NE1
	680	NE	35	75	0,10	187	150	141	5,0	2,8	AZK681M450NE1
		PE	40	75	0,10	187	150	141	5,4	3,0	AZK681M450PE1
	1000	PG	40	100	0,10	127	102	96	7,4	4,1	AZK102M450PG1
	1200	PG	40	100	0,10	106	85	80	8,1	4,5	AZK122M450PG1

Dimension, Quantity and Weight for box

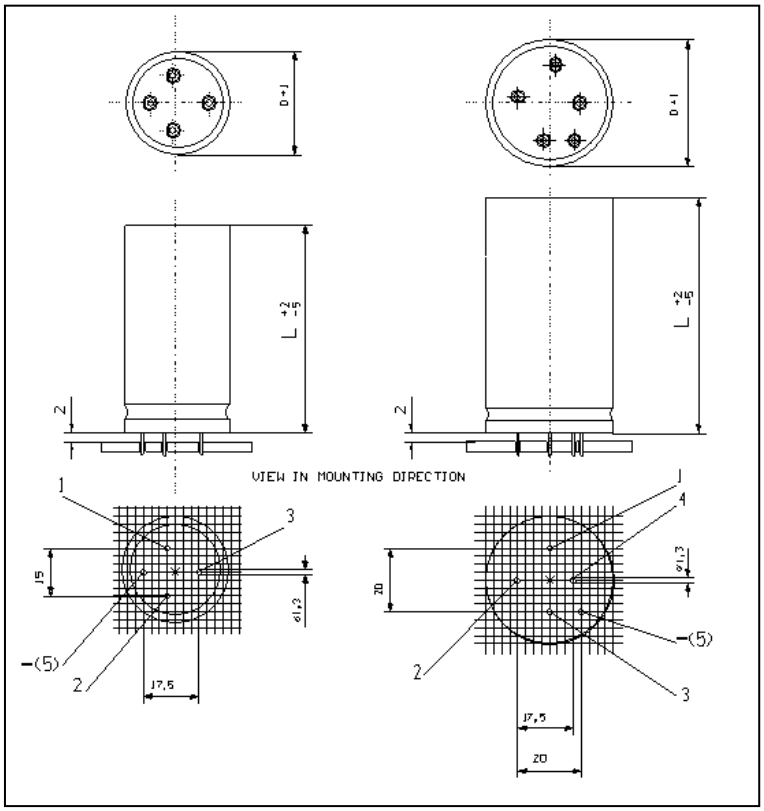

Case		Connections	Packaging	
Code	DxL	PIN- DIN Type Number	Pcs/Box	Weight/box
NB	35x40	4	100	6-8
NC	35x50	4	100	6-8
NN	35x60	4	100	5-7
NE	35x75	4	50	6-8
PB	40x40	5	100	6-8
PC	40x50	5	100	8-9
PN	40x60	5	100	8-10
PE	40x75	5	50	9-11
PG	40x100	5	50	6-8

All dimensions in mm, torque in Nm, weight in kg

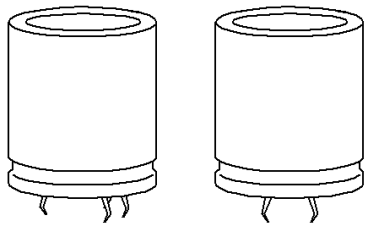

AZS AZC

Itelcond

Series AZC AZS– 105°C 3000h

Capacitors PCB type

- AZC 2 pins
- AZS 4 pins
- Capacitance Tolerance: -20 + 20% – standard (M)
- Climatic category: 25/105/56
- Case: 30x40 – 45x100
- Temperature – 25°C + 105°C

Mechanical Outlines

- Case: aluminium made
- Terminals: solder pin
- Sealing: hermetic on Rubber Bakelite cover
- Pressure Release Vent: onto aluminium case
- No insulated bottom
- Sleeve: self-extinguishing thermo shrinkable
- Size: see enclosed drawings
- External Material UL94-V0

Ordering Code: Example

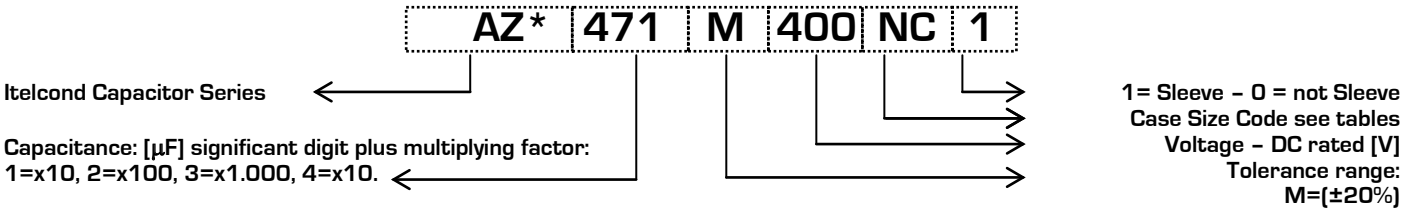

Ripple Current

The allowable values of ripple current in Ampères, are related to the temperature and frequency by following equation:

$$I_{Ripple} = K_t \bullet K_f \bullet I_{Ripple@105°C}$$

Where:

- IRipple@105°C is the limit given by tables, @ 105°C/100HZ
- Kt is the Temperature Correlation Factor
- Kf is the Frequency Correlation Factor

Note .Superimposed alternating voltage summed to DC volage must not exceed rated voltage, rated ripple current must not be exceeded and no reverse polarity is allowed

°C	50	65	75	85	95	105
Kt	2.40	2.20	2.10	1.80	1.30	1.00

Table 1-Kt Values

	Kf
Vn/Hz	V>160
50	0.88
100	1.00
300	1.20
400	1.25
500	1.35
>1000	1.40

Table 2-Kf Values

Expected Lifetime End of Life Criteria

During useful life typical electrical parameters of electrolytic capacitor are subject to change.
End of Life criteria, when rated temperature, voltage and ripple are applied, are:

$\Delta C / C_{t0} \leq 30\%$ *Equation 1*

$ESR \leq 3 \bullet ESR_{t0}$ *Equation 2*

$I_f \leq I_{f t0}$ *Equation 3*

where t_0 is the initial value

Voltage Endurance Test Requirements

On Voltage Endurance Test are based Expected Lifetime Curves.
End of Life criteria, when rated temperature, and voltage are applied for 2'000hrs, are

$\Delta C / C_{t0} \leq 10\%$ *Equation 4*

$ESR \leq 1{,}3 \bullet ESR_{t0}$ *Equation 5*

$I_f \leq I_{f t0}$ *Equation 6*

where t_0 is the initial value

Expected Lifetime Vs Temperature and Ripple Current

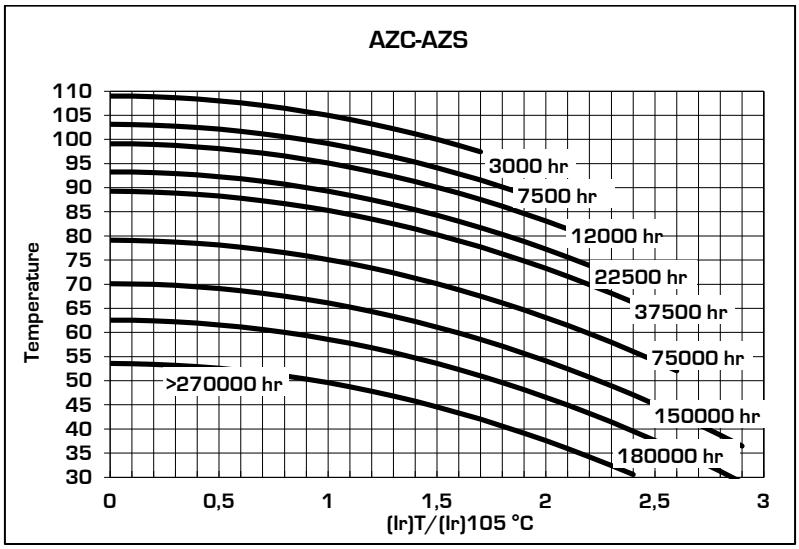

Table 3

Leakage Current

After the rated voltage has been applied to the capacitor for 5 minutes the leakage current must be within those limits.

Maximum limit	@25°C	If≤0,004xCxV
Operating limit	@25°C	If≤0,001xCxV

Where: If=leakage current [µA], C=capacitance [µF], V=rated voltage [V]

Surge Voltage

Working Voltage	200	250	400	450
Surge Voltage	230	290	440	495

	Capacitance	Case	Diam	Height	Tanδ	ESRmax | typ		Zmax	Iripple @100Hz		Ordering Code
	[µF]@100Hz		[mm]	[mm]	[%]@100Hz	[mΩ]@100Hz		[mΩ]@10KHz	[A]@85°C	[A]@105°C	*= C, 2 Pins | S, 4 Pins
200	470	MB	30	40	0,10	271	217	203	2,9	1,6	AZ*471M200MB1
	680	MB	30	40	0,10	187	150	141	3,5	1,9	AZ*681M200MB1
	1000	MC	30	50	0,10	127	102	96	4,7	2,6	AZ*102M200MC1
		NB	35	40	0,10	127	102	96	4,6	2,6	AZ*102M200NB1
	1500	NC	35	50	0,10	85	68	64	6,2	3,5	AZ*152M200NC1
	2200	NE	35	75	0,10	58	46	43	9,0	5,0	AZ*222M200NE1
		QC	45	50	0,10	58	46	43	8,7	4,8	AZ*222M200QC1
	3300	PG	40	100	0,10	39	31	29	13,5	7,5	AZ*332M200PG1
		QE	45	75	0,10	39	31	29	12,7	7,0	AZ*332M200QE1
	3900	QG	45	100	0,10	33	26	24	15,7	8,7	AZ*392M200QG1
250	470	MB	30	40	0,10	271	217	203	2,9	1,6	AZ*471M250MB1
	680	MC	30	50	0,10	187	150	141	3,8	2,1	AZ*681M250MC1
		NB	35	40	0,10	187	150	141	3,8	2,1	AZ*681M250NB1
	1000	NB	35	40	0,10	127	102	96	4,6	2,6	AZ*102M250NB1
		NC	35	50	0,10	127	102	96	5,1	2,8	AZ*102M250NC1
	1500	NE	35	75	0,10	85	68	64	7,4	4,1	AZ*152M250NE1
		PC	40	50	0,10	85	68	64	6,7	3,7	AZ*152M250PC1
		PE	40	75	0,10	85	68	64	8,0	4,4	AZ*152M250PE1
	2200	PG	40	100	0,10	58	46	43	11,0	6,1	AZ*222M250PG1
400	220	MB	30	40	0,10	579	463	434	2,0	1,1	AZ*221M400MB1
	330	MB	30	40	0,10	386	309	290	2,4	1,4	AZ*331M400MB1
	470	MC	30	50	0,10	271	217	203	3,2	1,8	AZ*471M400MC1
		NB	35	40	0,10	271	217	203	3,2	1,8	AZ*471M400NB1
		NC	35	50	0,10	271	217	203	3,5	1,9	AZ*471M400NC1
	560	NC	35	50	0,10	227	182	171	3,8	2,1	AZ*561M400NC1
	680	NC	35	50	0,10	187	150	141	4,2	2,3	AZ*681M400NC1
		NN	35	60	0,10	187	150	141	4,5	2,5	AZ*681M400NN1
		NE	35	75	0,10	187	150	141	5,0	2,8	AZ*681M400NE1
		PC	40	50	0,10	187	150	141	4,5	2,5	AZ*681M400PC1
	820	NN	35	60	0,10	155	124	117	5,0	2,8	AZ*821M400NN1
		PN	40	60	0,10	155	124	117	5,4	3,0	AZ*821M400PN1
	1000	NN	35	60	0,10	127	102	96	5,5	3,1	AZ*102M400NN1
		NE	35	75	0,10	127	102	96	6,1	3,4	AZ*102M400NE1
		PN	40	60	0,10	127	102	96	5,9	3,3	AZ*102M400PN1
		PE	40	75	0,10	127	102	96	6,5	3,6	AZ*102M400PE1
		QC	45	50	0,10	127	102	96	5,9	3,3	AZ*102M400QC1
		QN	45	60	0,10	127	102	96	6,3	3,5	AZ*102M400QN1
	1200	PE	40	75	0,10	106	85	80	7,2	4,0	AZ*122M400PE1
		PG	40	100	0,10	106	85	80	8,1	4,5	AZ*122M400PG1
	1500	PG	40	100	0,10	85	68	64	9,1	5,1	AZ*152M400PG1
		QN	45	60	0,10	85	68	64	7,8	4,3	AZ*152M400QN1
		QE	45	75	0,10	85	68	64	8,6	4,8	AZ*152M400QE1

	Capacitance	Case	Diam	Height	Tanδ	ESRmax | typ		Zmax	Iripple @100Hz		Ordering Code
	[µF]@100Hz		[mm]	[mm]	[%]@100Hz	[mΩ]@100Hz		[mΩ]@10KHz	[A]@85°C	[A]@105°C	*= C, 2 Pins | S, 4 Pins
400	1800	QG	45	100	0,10	71	57	53	10,6	5,9	AZ*182M400QG1
	2200	QG	45	100	0,10	58	46	43	11,8	6,5	AZ*222M400QG1
450	220	MB	30	40	0,10	579	463	434	2,0	1,1	AZ*221M450MB1
	330	MC	30	50	0,10	386	309	290	2,7	1,5	AZ*331M450MC1
		NB	35	40	0,10	386	309	290	2,7	1,5	AZ*331M450NB1
	470	NC	35	50	0,10	271	217	203	3,5	1,9	AZ*471M450NC1
	560	NE	35	75	0,10	227	182	171	4,5	2,5	AZ*561M450NE1
		PC	40	50	0,10	227	182	171	4,1	2,3	AZ*561M450PC1
	680	NN	35	60	0,10	187	150	141	4,5	2,5	AZ*681M450NN1
		NE	35	75	0,10	187	150	141	5,0	2,8	AZ*681M450NE1
		PE	40	75	0,10	187	150	141	5,4	3,0	AZ*681M450PE1
		QC	45	50	0,10	187	150	141	4,9	2,7	AZ*681M450QC1
	820	NE	35	75	0,10	155	124	117	5,5	3,1	AZ*821M450NE1
	1000	PE	40	75	0,10	127	102	96	6,5	3,6	AZ*102M450PE1
		PG	40	100	0,10	127	102	96	7,4	4,1	AZ*102M450PG1
		QE	45	75	0,10	127	102	96	7,0	3,9	AZ*102M450QE1
	1200	PG	40	100	0,10	106	85	80	8,1	4,5	AZ*122M450PG1
	1500	QG	45	100	0,10	85	68	64	9,7	5,4	AZ*152M450QG1

Dimension, Quantity and Weight for box

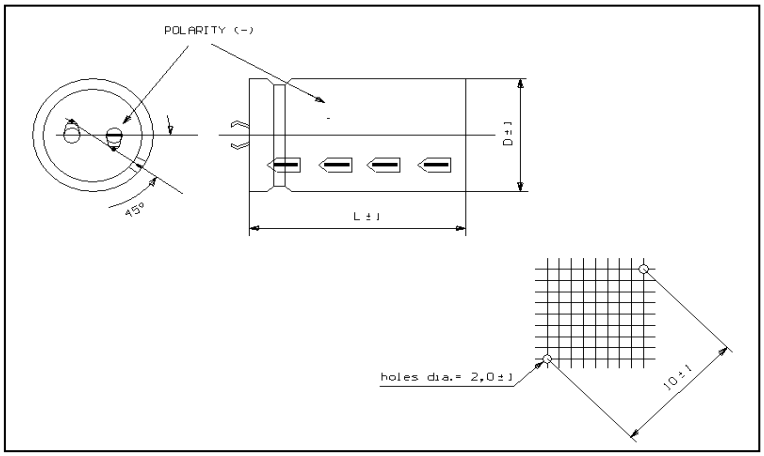

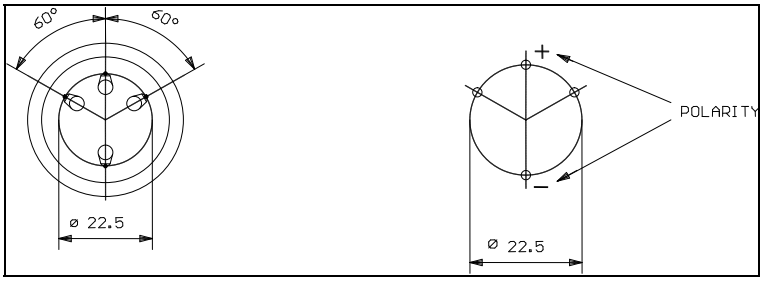

Case		Connections			Packaging	
Code	DxL	PIN			Pcs/Box	Weight/box
		Number		Lenght		
MB	30x105	2		6.3	100	4-6
MC	30x50	2		6.3	100	4-6
NB	35x40	2	4	6.3	100	6-8
NC	35x50	2	4	6.3	100	6-8
NN	35x60	2	4	6.3	100	5-7
NE	35x75	2	4	6.3	50	6-8
PB	40x40	2	4	6.3	100	6-8
PC	40x50	2	4	6.3	100	8-9
PN	40x60	2	4	6.3	100	8-10
PE	40x75	2	4	6.3	50	9-11
PG	40x100	2	4	6.3	50	6-8
QC	45x50		4	6.3	30	6-8
QN	45x60		4	6.3	30	
QE	45x75		4	6.3	30	7-9
QG	45x100		4	6.3	30	8-10

All dimensions in mm, torque in Nm, weight in kg

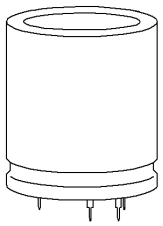

ATK

Itelcond

Series ATK– 105°C 5000h

Capacitors PCB type

- ATK DIN pins
- Capacitance Tolerance: -20 + 20% – standard (M)
- Climatic category: 25/105/56
- Case: 35x40 – 40x100
- Temperature – 25°C + 105°C

Mechanical Outlines

- Case: aluminium made
- Terminals: solder pin
- Sealing: hermetic on Rubber Bakelite cover
- Pressure Release Vent: onto aluminium case
- No insulated bottom
- Sleeve: self-extinguishing thermo shrinkable
- Size: see enclosed drawings
- External Material UL94-V0

Ordering Code: Example

ATK	471	M	400	NC	1

Itelcond Capacitor Series

Capacitance: [µF] significant digit plus multiplying factor:
1=x10, 2=x100, 3=x1.000, 4=x10.

1= Sleeve – 0 = not Sleeve
Case Size Code see tables
Voltage – DC rated [V]
Tolerance range:
M=(±20%)

Ripple Current

The allowable values of ripple current in Ampères, are related to the temperature and frequency by following equation:

$$I_{Ripple} = K_t \bullet K_f \bullet I_{Ripple@105°C}$$

Where:

- IRipple@105°C is the limit given by tables, @ 105°C/100HZ
- Kt is the Temperature Correlation Factor
- Kf is the Frequency Correlation Factor

Note .Superimposed alternating voltage summed to DC volage must not exceed rated voltage, rated ripple current must not be exceeded and no reverse polarity is allowed

°C	50	65	75	85	95	105
Kt	2.40	2.20	2.10	1.80	1.30	1.00

Table 1-Kt Values

	Kf
Vn/Hz	V>160
50	0.88
100	1.00
300	1.20
400	1.25
500	1.35
>1000	1.40

Table 2-Kf Values

Expected Lifetime End of Life Criteria

During useful life typical electrical parameters of electrolytic capacitor are subject to change.
End of Life criteria, when rated temperature, voltage and ripple are applied, are:

$\Delta C / C_{t0} \leq 30\%$ *Equation 1*

$ESR \leq 3 \bullet ESR_{t0}$ *Equation 2*

$I_f \leq I_{f t0}$ *Equation 3*

where t_0 is the initial value

Voltage Endurance Test Requirements

On Voltage Endurance Test are based Expected Lifetime Curves.
End of Life criteria, when rated temperature, and voltage are applied for 2'000hrs, are

$\Delta C / C_{t0} \leq 10\%$ *Equation 4*

$ESR \leq 1{,}3 \bullet ESR_{t0}$ *Equation 5*

$I_f \leq I_{f t0}$ *Equation 6*

where t_0 is the initial value

Expected Lifetime Vs Temperature and Ripple Current

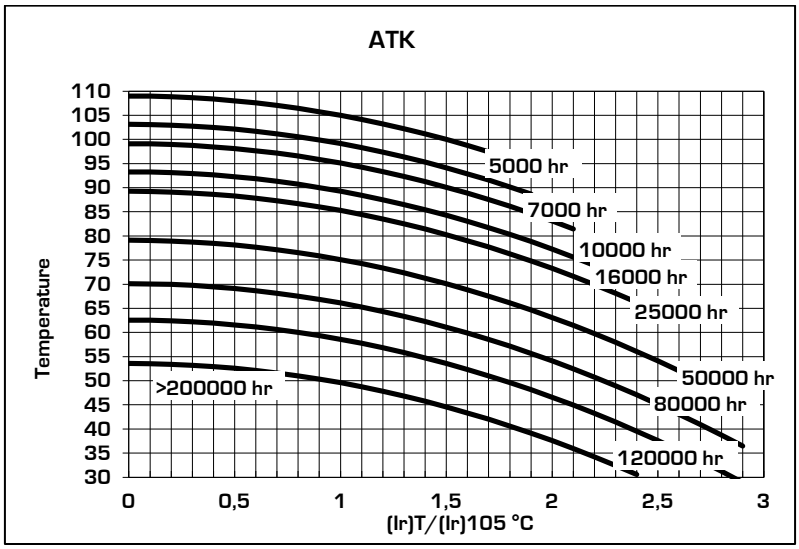

Table 3

Leakage Current

After the rated voltage has been applied to the capacitor for 5 minutes the leakage current must be within those limits.

Maximum limit	@25°C	$If \leq 1.3 \bullet \sqrt{C \bullet V}$
Operating limit	@25°C	$If \leq 1.0 \bullet \sqrt{C \bullet V}$

Where: If=leakage current [µA], C=capacitance [µF], V=rated voltage [V]

Surge Voltage

Working Voltage	200	250	400	450
Surge Voltage	230	290	440	495

	Capacitance	Case	Diam	Height	Tanδ	ESRmax | typ		Zmax	Iripple @100Hz		Ordering Code
	[µF]@100Hz		[mm]	[mm]	[%]@100Hz	[mΩ]@100Hz		[mΩ]@10KHz	[A]@85°C	[A]@105°C	
200	220	MB	30	40	0,08	463	371	347	2,2	1,2	ATK221M200MB1
	330	NB	35	40	0,08	309	247	232	3,0	1,7	ATK331M200NB1
	470	NC	35	50	0,08	217	173	163	3,9	2,2	ATK471M200NC1
	680	PC	40	50	0,08	150	120	112	5,1	2,8	ATK681M200PC1
	1000	PE	40	75	0,08	102	82	76	7,3	4,1	ATK102M200PE1
	1500	PG	40	100	0,08	68	54	51	10,2	5,7	ATK152M200PG1
250	220	MB	30	40	0,08	463	371	347	2,2	1,2	ATK221M250MB1
		NB	35	40	0,08	463	371	347	2,4	1,3	ATK221M250NB1
	330	NC	35	50	0,08	309	247	232	3,3	1,8	ATK331M250NC1
	680	PC	40	50	0,08	150	120	112	5,1	2,8	ATK681M250PC1
	1800	PE	40	75	0,08	57	45	42	9,8	5,4	ATK182M250PE1
	2200	PG	40	100	0,08	46	37	35	12,3	6,9	ATK222M250PG1
400	100	MB	30	40	0,08	1019	815	764	1,5	0,8	ATK101M400MB1
	150	NB	35	40	0,08	679	544	510	2,0	1,1	ATK151M400NB1
	220	NC	35	50	0,08	463	371	347	2,7	1,5	ATK221M400NC1
	330	NC	35	50	0,08	309	247	232	3,3	1,8	ATK331M400NC1
		PC	40	50	0,08	309	247	232	3,5	2,0	ATK331M400PC1
	470	PC	40	50	0,08	217	173	163	4,2	2,3	ATK471M400PC1
	680	NN	35	60	0,08	150	120	112	5,1	2,8	ATK681M400NN1
		NE	35	75	0,08	150	120	112	5,6	3,1	ATK681M400NE1
		PN	40	60	0,08	150	120	112	5,5	3,0	ATK681M400PN1
		PE	40	75	0,08	150	120	112	6,0	3,3	ATK681M400PE1
		QN	45	60	0,08	150	120	112	5,9	3,3	ATK681M400QN1
	1000	NE	35	75	0,08	102	82	76	6,8	3,8	ATK102M400NE1
		PE	40	75	0,08	102	82	76	7,3	4,1	ATK102M400PE1
		PG	40	100	0,08	102	82	76	8,3	4,6	ATK102M400PG1
450	220	MB	30	40	0,09	521	417	391	2,1	1,2	ATK221M450MB1
	330	MC	30	50	0,09	347	278	261	2,8	1,6	ATK331M450MC1
		NB	35	40	0,09	347	278	261	2,8	1,6	ATK331M450NB1
	470	NC	35	50	0,09	244	195	183	3,7	2,0	ATK471M450NC1
		PB	40	40	0,09	244	195	183	3,6	2,0	ATK471M450PB1
	560	PC	40	50	0,09	205	164	154	4,3	2,4	ATK561M450PC1
	680	NE	35	75	0,09	169	135	126	5,3	2,9	ATK681M450NE1
		PE	40	75	0,09	169	135	126	5,7	3,2	ATK681M450PE1
	820	PE	40	75	0,09	140	112	105	6,2	3,5	ATK821M450PE1
		QE	45	75	0,09	140	112	105	6,7	3,7	ATK821M450QE1
	1000	PG	40	100	0,09	115	92	86	7,8	4,4	ATK102M450PG1
		QG	45	100	0,09	115	92	86	8,4	4,6	ATK102M450QG1
	1200	PG	40	100	0,09	96	76	72	8,6	4,8	ATK122M450PG1
	1200	QG	45	100	0,09	96	76	72	9,2	5,1	ATK122M450QG1

Dimension, Quantity and Weight for box

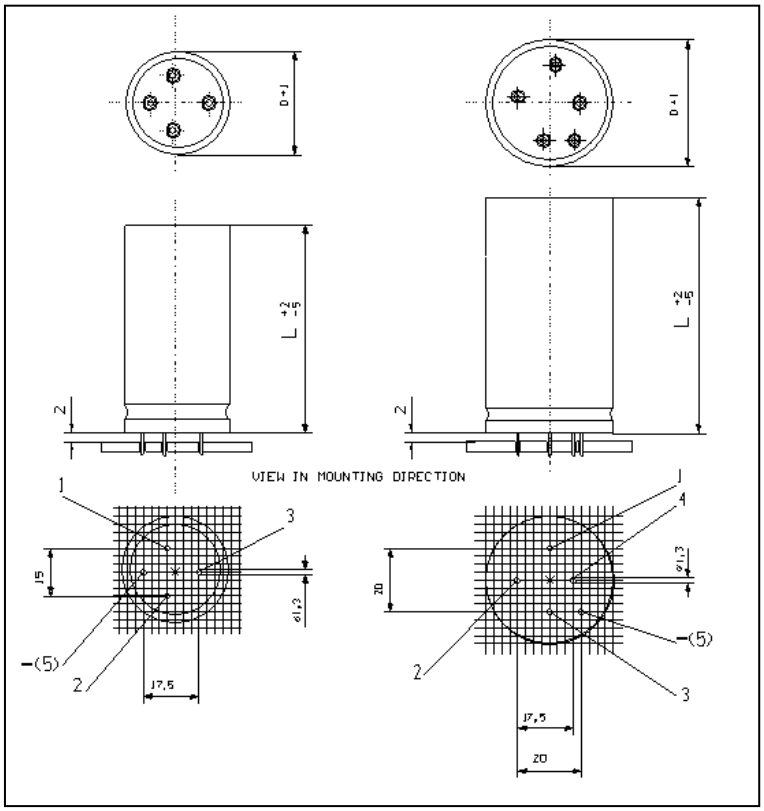

Case		Connections	Packaging	
Code	DxL	PIN- DIN Type Number	Pcs/Box	Weight/box
NB	35x40	4	100	6-8
NC	35x50	4	100	6-8
NN	35x60	4	100	5-7
NE	35x75	4	50	6-8
PB	40x40	5	100	6-8
PC	40x50	5	100	8-9
PN	40x60	5	100	8-10
PE	40x75	5	50	9-11
PG	40x100	5	50	6-8

All dimensions in mm, torque in Nm, weight in kg

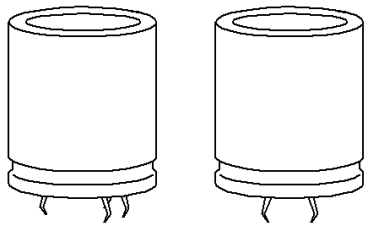

ATS ATC

Itelcond

Series ATC ATS– 105°C 5000h

Capacitors PCB type

- ATC 2 pins
- ATS 4 pins
- Capacitance Tolerance: -20 + 20% – standard (M)
- Climatic category: 25/105/56
- Case: 30x40 – 45x100
- Temperature – 25°C + 105°C

Mechanical Outlines

- Case: aluminium made
- Terminals: solder pin
- Sealing: hermetic on Rubber Bakelite cover
- Pressure Release Vent: onto aluminium case
- No insulated bottom
- Sleeve: self-extinguishing thermo shrinkable
- Size: see enclosed drawings
- External Material UL94-V0

Ordering Code: Example

AT*	471	M	400	NC	1

Itelcond Capacitor Series

Capacitance: [µF] significant digit plus multiplying factor:
1=x10, 2=x100, 3=x1.000, 4=x10.

1= Sleeve – 0 = not Sleeve
Case Size Code see tables
Voltage – DC rated [V]
Tolerance range:
M=(±20%)

Ripple Current

The allowable values of ripple current in Ampères, are related to the temperature and frequency by following equation:

$$I_{Ripple} = K_t \bullet K_f \bullet I_{Ripple@105°C}$$

Where:

- IRipple@85°C is the limit given by tables, @ 105°C/100HZ
- Kt is the Temperature Correlation Factor
- Kf is the Frequency Correlation Factor

Note .Superimposed alternating voltage summed to DC volage must not exceed rated voltage, rated ripple current must not be exceeded and no reverse polarity is allowed

°C	50	65	75	85	95	105
Kt	2.40	2.20	2.10	1.80	1.30	1.00

Table 1-Kt Values

	Kf
Vn/Hz	V>160
50	0.88
100	1.00
300	1.20
400	1.25
500	1.35
>1000	1.40

Table 2-Kf Values

Expected Lifetime End of Life Criteria

During useful life typical electrical parameters of electrolytic capacitor are subject to change.
End of Life criteria, when rated temperature, voltage and ripple are applied, are:

$\Delta C / C_{t0} \leq 30\%$ *Equation 1*

$ESR \leq 3 \bullet ESR_{t0}$ *Equation 2*

$I_f \leq I_{f t0}$ *Equation 3*

where t_0 is the initial value

Voltage Endurance Test Requirements

On Voltage Endurance Test are based Expected Lifetime Curves.
End of Life criteria, when rated temperature, and voltage are applied for 2'000hrs, are

$\Delta C / C_{t0} \leq 10\%$ *Equation 4*

$ESR \leq 1{,}3 \bullet ESR_{t0}$ *Equation 5*

$I_f \leq I_{f t0}$ *Equation 6*

where t_0 is the initial value

Expected Lifetime Vs Temperature and Ripple Current

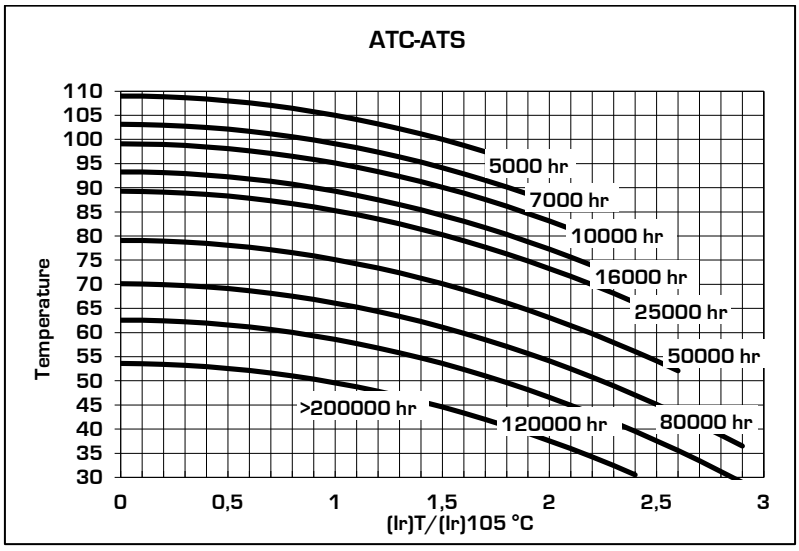

Table 3

Leakage Current

After the rated voltage has been applied to the capacitor for 5 minutes the leakage current must be within those limits.

Maximum limit	@25°C	$If \leq 1.3 \bullet \sqrt{C \bullet V}$
Operating limit	@25°C	$If \leq 1.0 \bullet \sqrt{C \bullet V}$

Where: If=leakage current [µA], C=capacitance [µF], V=rated voltage [V]

Surge Voltage

Working Voltage	200	250	400	450
Surge Voltage	230	290	440	495

	Capacitance	Case	Diam	Height	Tanδ	ESRmax | typ		Zmax	Iripple @100Hz		Ordering Code
	[µF]@100Hz		[mm]	[mm]	[%]@100Hz	[mΩ]@100Hz		[mΩ]@10KHz	[A]@85°C	[A]@105°C	*= C, 2 Pins | S, 4 Pins
200	220	MB	30	40	0,08	463	371	347	2,2	1,2	AT*221M200MB1
	330	NB	35	40	0,08	309	247	232	3,0	1,7	AT*331M200NB1
	470	NC	35	50	0,08	217	173	163	3,9	2,2	AT*471M200NC1
	680	MC	30	50	0,08	150	120	112	4,3	2,4	AT*681M200MC1
		PC	40	50	0,08	150	120	112	5,1	2,8	AT*681M200PC1
	1000	NC	35	50	0,08	102	82	76	5,7	3,2	AT*102M200NC1
		PE	40	75	0,08	102	82	76	7,3	4,1	AT*102M200PE1
	1500	PC	40	50	0,08	68	54	51	7,5	4,2	AT*152M200PC1
		PG	40	100	0,08	68	54	51	10,2	5,7	AT*152M200PG1
	1800	PE	40	75	0,08	57	45	42	9,8	5,4	AT*182M200PE1
		QC	45	50	0,08	57	45	42	8,8	4,9	AT*182M200QC1
	2200	PG	40	100	0,08	46	37	35	12,3	6,9	AT*222M200PG1
		QE	45	75	0,08	46	37	35	11,6	6,4	AT*222M200QE1
	3300	QG	45	100	0,08	31	25	23	16,1	8,9	AT*332M200QG1
250	220	MB	30	40	0,08	463	371	347	2,2	1,2	AT*221M250MB1
		NB	35	40	0,08	463	371	347	2,4	1,3	AT*221M250NB1
	330	NC	35	50	0,08	309	247	232	3,3	1,8	AT*331M250NC1
	470	MC	30	50	0,08	217	173	163	3,6	2,0	AT*471M250MC1
	680	NC	35	50	0,08	150	120	112	4,7	2,6	AT*681M250NC1
	1000	NC	35	50	0,08	102	82	76	5,7	3,2	AT*102M250NC1
	1200	PC	40	50	0,08	85	68	64	6,7	3,7	AT*122M250PC1
	1500	PE	40	75	0,08	68	54	51	8,9	5,0	AT*152M250PE1
		QC	45	50	0,08	68	54	51	8,1	4,5	AT*152M250QC1
	2200	PG	40	100	0,08	46	37	35	12,3	6,9	AT*222M250PG1
		QE	45	75	0,08	46	37	35	11,6	6,4	AT*222M250QE1
	2700	QG	45	100	0,08	38	30	28	14,6	8,1	AT*272M250QG1
400	220	MB	30	40	0,08	463	371	347	2,2	1,2	AT*221M400MB1
	330	MC	30	50	0,08	309	247	232	3,0	1,7	AT*331M400MC1
		NC	35	50	0,08	309	247	232	3,3	1,8	AT*331M400NC1
	470	NC	35	50	0,08	217	173	163	3,9	2,2	AT*471M400NC1
	680	NN	35	60	0,08	150	120	112	5,1	2,8	AT*681M400NN1
		NE	35	75	0,08	150	120	112	5,6	3,1	AT*681M400NE1
		PC	40	50	0,08	150	120	112	5,1	2,8	AT*681M400PC1
	820	PC	40	50	0,08	124	99	93	5,6	3,1	AT*821M400PC1
	1000	PN	40	60	0,08	102	82	76	6,6	3,7	AT*102M400PN1
		PE	40	75	0,08	102	82	76	7,3	4,1	AT*102M400PE1
		PG	40	100	0,08	102	82	76	8,3	4,6	AT*102M400PG1
		QC	45	50	0,08	102	82	76	6,6	3,7	AT*102M400QC1
	1200	PE	40	75	0,08	85	68	64	8,0	4,4	AT*122M400PE1
		QN	45	60	0,08	85	68	64	7,8	4,3	AT*122M400QN1
	1500	PG	40	100	0,08	68	54	51	10,2	5,7	AT*152M400PG1
	1500	QE	45	75	0,08	68	54	51	9,6	5,3	AT*152M400QE1

Itelcond

	Capacitance	Case	Diam	Height	Tanδ	ESRmax | typ		Zmax	Iripple @100Hz		Ordering Code
	[µF]@100Hz		[mm]	[mm]	[%]@100Hz	[mΩ]@100Hz		[mΩ]@10KHz	[A]@85°C	[A]@105°C	*= C, 2 Pins | S, 4 Pins
400	1800	QG	45	100	0,08	57	45	42	11,9	6,6	AT*182M400QG1
450	220	MB	30	40	0,09	521	417	391	2,1	1,2	AT*221M450MB1
	330	MC	30	50	0,09	347	278	261	2,8	1,6	AT*331M450MC1
		NB	35	40	0,09	347	278	261	2,8	1,6	AT*331M450NB1
	470	NC	35	50	0,09	244	195	183	3,7	2,0	AT*471M450NC1
		PB	40	40	0,09	244	195	183	3,6	2,0	AT*471M450PB1
	560	PC	40	50	0,09	205	164	154	4,3	2,4	AT*561M450PC1
	680	NE	35	75	0,09	169	135	126	5,3	2,9	AT*681M450NE1
	820	PE	40	75	0,09	140	112	105	6,2	3,5	AT*821M450PE1
		QC	45	50	0,09	140	112	105	5,6	3,1	AT*821M450QC1
	1000	PG	40	100	0,09	115	92	86	7,8	4,4	AT*102M450PG1
		QE	45	75	0,09	115	92	86	7,4	4,1	AT*102M450QE1
	1200	PG	40	100	0,09	96	76	72	8,6	4,8	AT*122M450PG1
	1500	QG	45	100	0,09	76	61	57	10,2	5,7	AT*152M450QG1

Dimension, Quantity and Weight for box

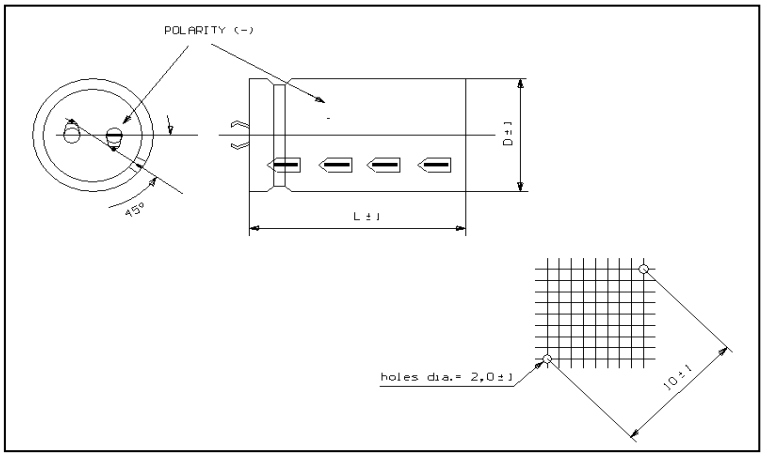

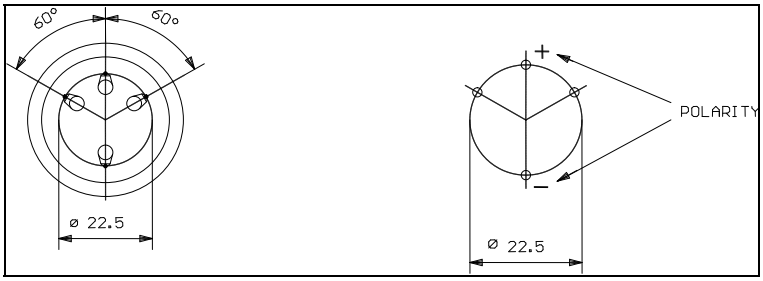

Case		Connections			Packaging	
Code	DxL	PIN			Pcs/Box	Weight/box
		Number		Lenght		
MB	30x105	2		6.3	100	4-6
MC	30x50	2		6.3	100	4-6
NB	35x40	2	4	6.3	100	6-8
NC	35x50	2	4	6.3	100	6-8
NN	35x60	2	4	6.3	100	5-7
NE	35x75	2	4	6.3	50	6-8
PB	40x40	2	4	6.3	100	6-8
PC	40x50	2	4	6.3	100	8-9
PN	40x60	2	4	6.3	100	8-10
PE	40x75	2	4	6.3	50	9-11
PG	40x100	2	4	6.3	50	6-8
QC	45x50		4	6.3	30	6-8
QN	45x60		4	6.3	30	
QE	45x75		4	6.3	30	7-9
QG	45x100		4	6.3	30	8-10

All dimensions in mm, torque in Nm, weight in kg

Mounting Hardware

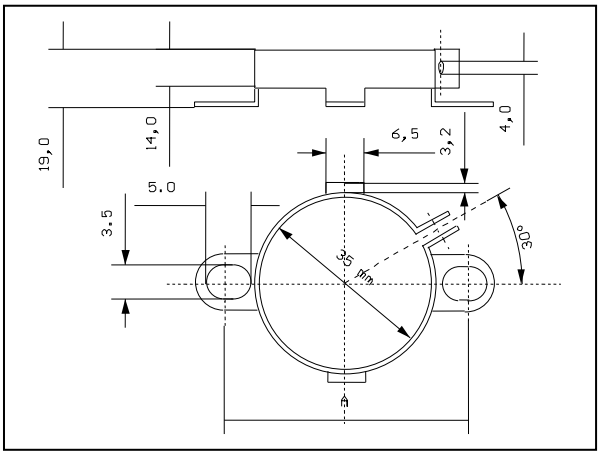

Figure 1

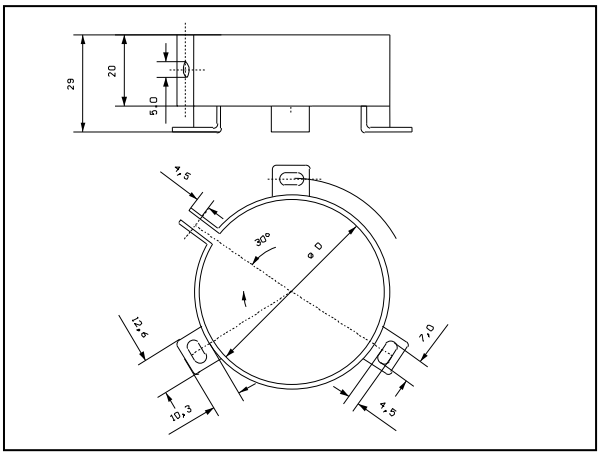

Figure 2

Ring clip code	D	A
ZAF-A	35	46
ZAF B	51	63,5
ZAF C	63	76
ZAF D	76	89
ZAF E	90	106

Table 1

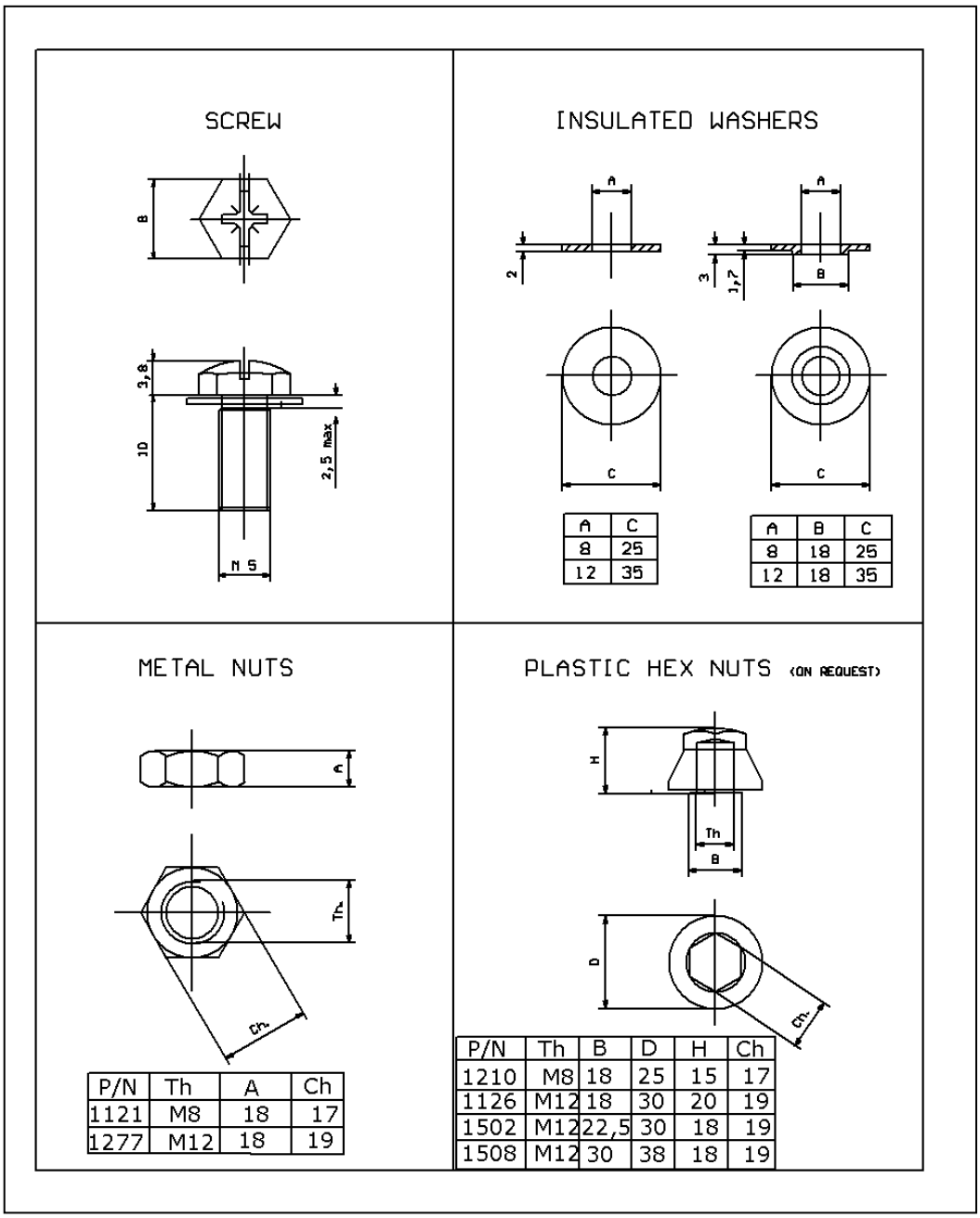
SCREW
B
3,8
10
2,5 max
M 5
INSULATED WASHERS
A
2
3
1,7
B
C
A | C
8 | 25
12 | 35
A | B | C
8 | 18 | 25
12 | 18 | 35
METAL NUTS
A
Th
Ch.
P/N | Th | A | Ch
1121 | M8 | 18 | 17
1277 | M12 | 18 | 19
PLASTIC HEX NUTS (ON REQUEST)
H
Th
B
D
Ch.
P/N | Th | B | D | H | Ch
1210 | M8 | 18 | 25 | 15 | 17
1126 | M12 | 18 | 30 | 20 | 19
1502 | M12 | 22,5 | 30 | 18 | 19
1508 | M12 | 30 | 38 | 18 | 19

Figure 3

Itelcond s.r.l.

20010 BAREGGIO (MI) -Italy - V.le De Gasperi, 30/36
Tel. +39.02.903.62.995 r.a. - Fax +39.02.90360740
Internet: www.itelcond.it - E-mail: itelcond@itelcond.it