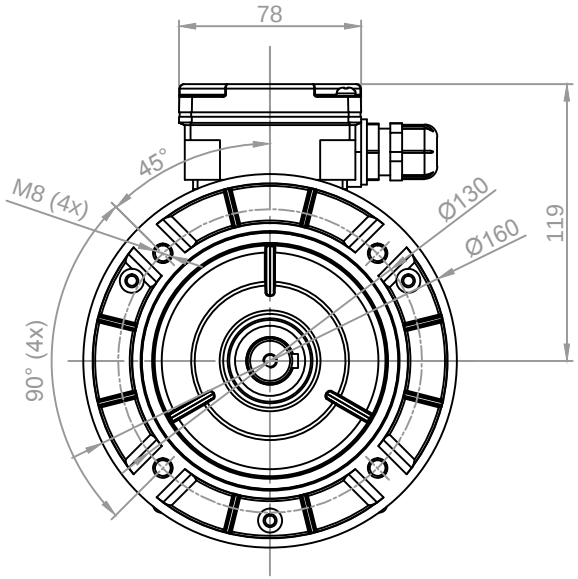

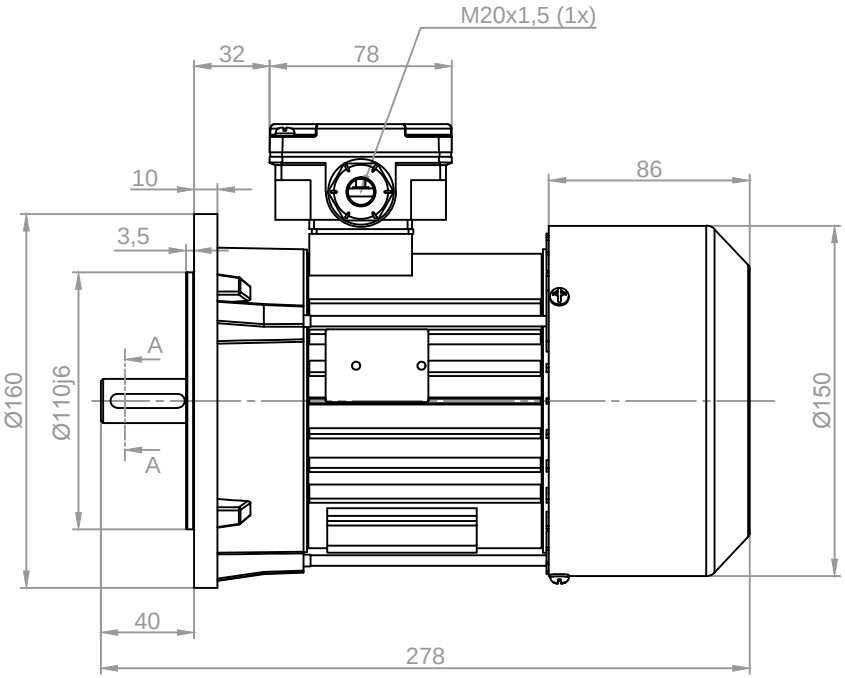

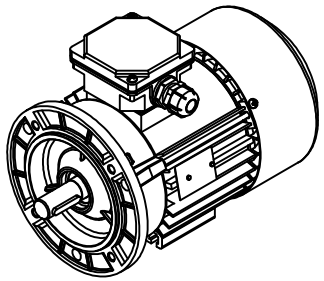

SECTION A-A

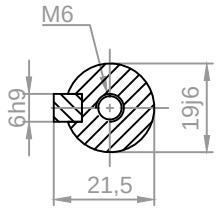

All dimensions are in mm and according to IEC 60072

Motor: CANTONI MOTOR	Feet:	None	Customer:		KOLMER ELEKTROMOTOREN	Projection:
	Flange:	B14B	Quotation number:			US
Mounting possibilities:	Dimensions are valid for motor type:		Article number:		Drawn by: JL	
IM B5 V1 V3	2SIEK 80-2B1		Special remarks:		Approved by: OB	
IM 3001 3011 3031	2SIEK 80-4B1				Date: 30-10-2014	REV. 0
	2SIEK 80-6A1				Drawing number: T1108.000026.R0	Sheet 1/1