Transmittal, reproduction, dissemination and/or editing of this document as well as utilization of its contents and communication thereof to others without express authorization are prohibited. Offenders will be held liable for payment of damages. All rights created by patent grant or registration of a utility model or design patent are reserved.

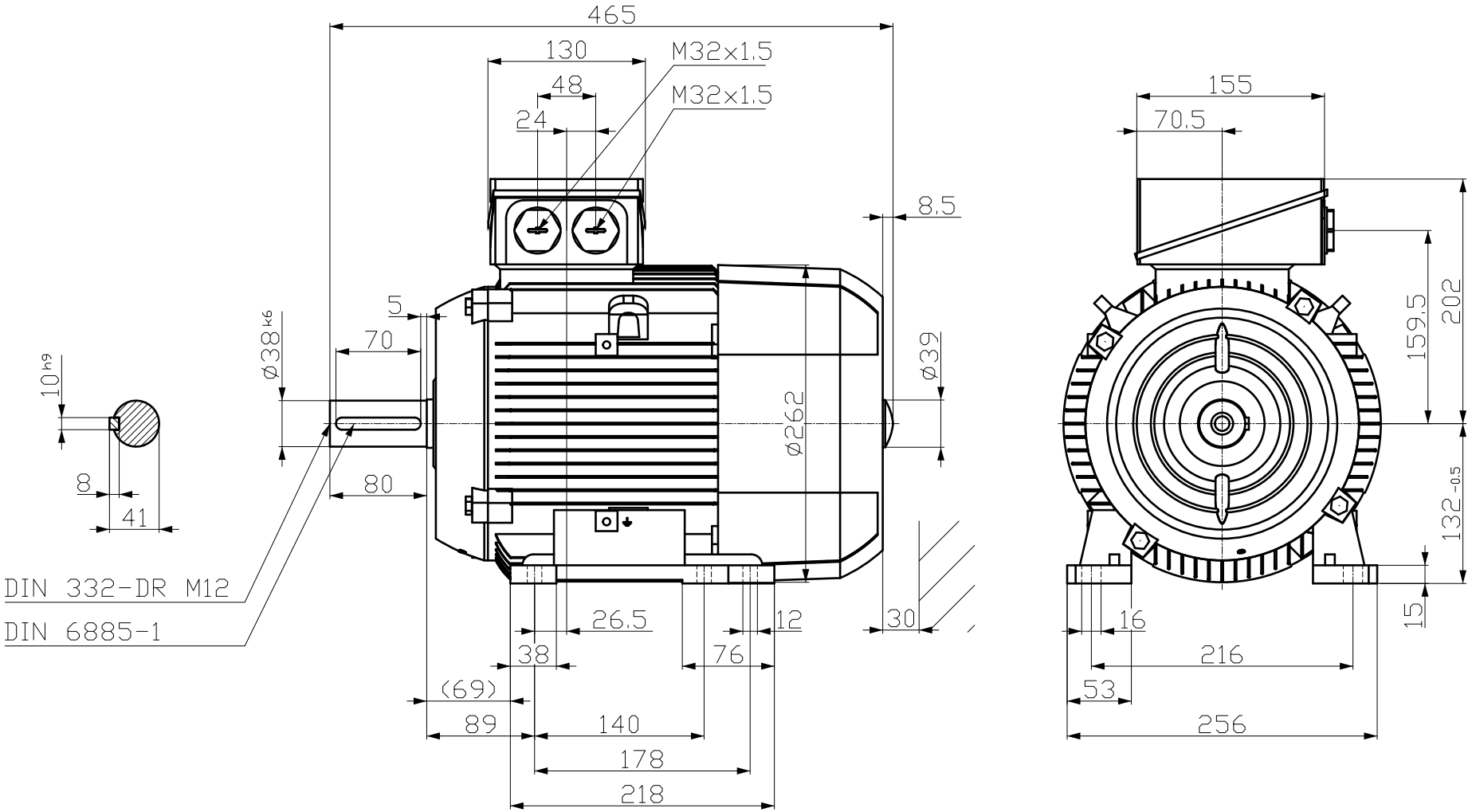

Tolerance	Surface	Material	Weight	Scale
			-	mm

1TZ9001-1CB22-2AA4-Z
L21+L25

ELEKTRA
inspired by e-power

Author		Dimensional drawing MaÇzeichnung	
Creator	DTK		
Approval			
Department			
Change Order		MLFB	Doc Type
Doc State	04.02.20	Item No	Paper Size A3
Revision	Index RS	Doc No	1st Language en 2nd Language de
Project No -		Ref No -	Sheet 1 of 1