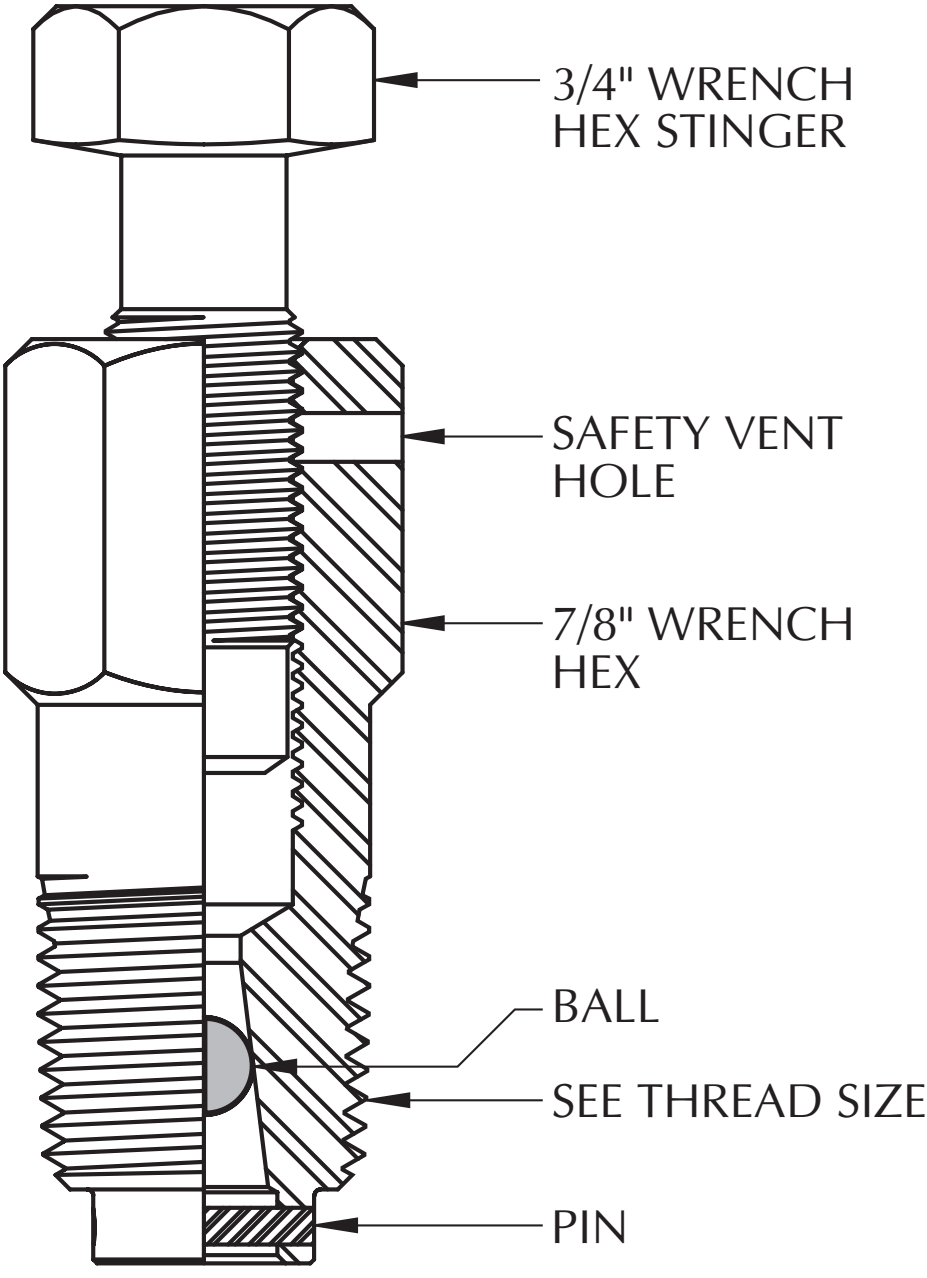
3/4" WRENCH
HEX STINGER
SAFETY VENT
HOLE
7/8" WRENCH
HEX
BALL
SEE THREAD SIZE
PIN